ROTAREX
VALVES - FITTINGS - REGULATORS

SUPPLY AND SWITCHOVER BOARDS
EUROPE

Handelsonderneming PD

GASAPPENDAGES - GASMENGERS

TABLE OF CONTENTS

PRODUCT RANGE OVERVIEW P.004

TECHNOLOGY OVERVIEW P.006
- Supply Boards P.006
- Switchover Boards P.007
- Quality Standards P.009
- Pressure Regulator Technology P.010

HOW TO CHOOSE A SUPPLY SYSTEM P.012
- Technical Parameters P.012
- Body Materials P.013
- Seat Materials P.013
- Inlet & Outlet Pressures P.013
- Gauges P.013
- Relief valves P.014
- Other product options P.014
- Cleaning P.014

PRODUCTS P.016
- Specialty gases P.016
  - · Supply Boards P.016
  - · Switchover Boards P.026
- Technical gases P.040
  - · Supply Boards P.040
  - · Switchover Boards P.042
- Accessories - Alarm Box P.044
- Accessories - Extension P.046
- Accessories - Pigtails P.048
- Accessories - Flexible Hose P.049
- Accessories - Duobloc P.050
- Accessories - Series VD P.052
- Accessories - Gas Cylinder Holder P.053

REFERENCE CHARTS P.054
- Gas compatibility table P.054
- Conversion tables P.055

ISO 9001 QUALITY ASSURANCE

All Rotarex regulators are produced in Europe in accordance with international standards (ISO; CGA....) and are guaranteed to provide safe and reliable performance in operation. All locations are ISO 9001.

SPECIALTY GASES

SUPPLY BOARDS

CMC 280 CMC 380 P. 016

Technology	Diaphragm + Cartridge
Inlet Pressure	230 / 300 bar 3335 / 4350 psig
Outlet Pressure	10 / 16 / 35 / 50 bar 145 / 232 / 508 / 725 psig
Flow Rate Nm³/h (N_2)	Up to 30 Nm³/h (N_2) depending on outlet pressure
Material	Raw Brass Chrome-plated brass Stainless steel

CM 280 - CM 380 P. 018

Technology	Diaphragm + Cartridge
Inlet Pressure	200 / 300 bar 2900 / 4350 psig
Outlet Pressure	10 / 16 / 35 bar 145 / 232 / 508 psig
Flow Rate Nm³/h (N_2)	10 / 20 / 30
Material	Chrome-plated brass Stainless steel

SERIES MOD P. 020

Technology	Diaphragm + Balanced Valve
Inlet Pressure	200 / 300 bar 2900 / 4350 psig
Outlet Pressure	10 / 16 / 30 / 50 bar 145 / 232 / 435 / 725 psig
Flow Rate Nm³/h (N_2)	200 bar: 70 / 110 / 150 / 180 300 bar: 50 / 70 / 100 / 130
Material	Raw Brass Chrome Plated Brass

SERIES CM 104 P. 022

Technology	Diaphragm
Inlet Pressure	200 bar 2900 psig
Outlet Pressure	10 / 25 / 50 bar 145 / 363 / 725 psig
Flow Rate Nm³/h (N_2)	10 / 10 / 50
Material	Stainless steel

SERIES CM 454 P. 024

Technology	Piston
Inlet Pressure	200 / 300 bar 2900 / 4350 psig
Outlet Pressure	160 bar 870 / 2320 psig
Flow Rate Nm³/h (N_2)	10 / 30
Material	Chrome plated brass

SWITCHOVER BOARDS

SERIES CC 284 / 384 P. 026

Technology	Diaphragm + cartridge
Inlet Pressure	230 / 300 bar 3335 / 4350 psig
Outlet Pressure	10 / 16 / 35 / 50 bar 145 / 232 / 508 / 725 psig
Flow Rate Nm³/h (N_2)	Up to 25 Nm³/h (N_2) depending on outlet pressure
Material	Raw brass Chrome plated brass Stainless steel
Change Over	Automatic switch with manual reset

SERIES CC 283 / 383 P. 028

Technology	Diaphragm + cartridge
Inlet Pressure	230 / 300 bar 3335 / 4350 psig
Outlet Pressure	10 / 16 / 35 / 50 bar 145 / 232 / 508 / 725 psig
Flow Rate Nm³/h (N_2)	Up to 25 Nm³/h (N_2) depending on outlet pressure
Material	Raw brass Chrome plated brass Stainless steel
Change Over	Manual

SERIES CC 285 / 385 P. 030

Technology	Diaphragm + cartridge
Inlet Pressure	230 / 300 bar 3335 / 4350 psig
Outlet Pressure	1.5 / 5.5 / 10 bar 22 / 80 / 145 psig
Flow Rate Nm³/h (N_2)	10 Nm³/h (N_2) depending on outlet pressure
Material	Raw brass Chrome plated brass Stainless steel
Change Over	Automatic switch with manual reset with integrated line regulator

SERIES CEN P. 032

Technology	Diaphragm + Balanced Valve
Inlet Pressure	200 / 300 bar 2900 / 4350 psig
Outlet Pressure	10 / 16 / 30 / 50 bar 145 / 232 / 435 / 725 psig
Flow Rate Nm³/h (N_2)	200 bar: 70 / 110 / 150 / 180 300 bar: 50 / 70 / 100 / 130
Material	Raw Brass Chrome Plated Brass
Change Over	Automatic switch with manual reset

SERIES TD 102 P. 034

Technology	Diaphragm
Inlet Pressure	200 bar 2900 psig
Outlet Pressure	10 / 25 / 50 bar 145 / 363 / 725 psig
Flow Rate Nm³/h (N_2)	10 / 10 / 50
Material	Stainless steel
Change Over	Automatic switch with manual reset

SERIES TD 202 P. 036

Technology	Diaphragm
Inlet Pressure	200 / 300 bar 2900 / 4350 psig
Outlet Pressure	10 / 16 bar 145 / 232 psig
Flow Rate Nm³/h (N_2)	10 / 10
Material	Chrome plated brass Stainless steel
Change Over	Automatic switch with manual reset

SERIES TD 502 P. 038

Technology	Diaphragm + Balanced Valve
Inlet Pressure	200 bar 2900 psig
Outlet Pressure	10 / 25 / 50 145 / 363 / 725 psig
Flow Rate Nm³/h (N_2)	50 / 50 / 100
Material	Chrome Plated Brass Stainless steel
Change Over	Manual

ALL RIGHTS OF CHANGE RESERVED

TECHNICAL GASES

SUPPLY BOARDS

SERIES MOD P. 040

Technology	Diaphragm + Balanced Valve
Inlet Pressure	200 / 300 bar 2900 / 4350 psig
Outlet Pressure	10 / 16 / 30 / 50 bar 145 / 232 / 435 / 725 psig
Flow Rate Nm^3/h (N_2)	200 bar: 70 / 110 / 150 / 180 300 bar: 50 / 70 / 100 / 130
Material	Raw Brass Chrome Plated Brass

SWITCHOVER BOARDS

SERIES CEN P. 042

Technology	Diaphragm + Balanced Valve
Inlet Pressure	200 / 300 bar 2900 / 4350 psig
Outlet Pressure	10 / 16 / 30 / 50 bar 145 / 232 / 435 / 725 psig
Flow Rate Nm^3/h (N_2)	200 bar: 70 / 110 / 150 / 180 300 bar: 50 / 70 / 100 / 130
Material	Raw Brass Chrome Plated Brass
Change Over	Automatic switch with manual reset

ACCESSORIES

BA 12 ALARM BOX P. 044

EXTENSIONS P. 046

PIGTAILS P. 048

FLEXIBLE HOSES P. 049

DUOBLOC P. 050

SERIES VD P. 052

GAS CYLINDER HOLDER P. 053

ALL RIGHTS OF CHANGE RESERVED

TECHNOLOGY OVERVIEW

SUPPLY BOARDS

A **supply board** is used in a central gas supply system in order to reduce the cylinder pressure to an appointed secondary pressure. The supply board will then supply a stable pressure to line regulators or points of use.

A supply board can be considered like a simplified switchover board (without the continuous gas supply from several high-pressure sources).

Most of our supply boards have 3 common inlets available. This avoids installation of extensions and increases safety of the installation.
Our products exist in raw brass, chrome plated or stainless steel. The installed regulators are coming from our standard product range.

ALL RIGHTS OF CHANGE RESERVED

TECHNOLOGY OVERVIEW (continued)

SWITCHOVER BOARDS

Rotarex switchover boards can make your source management easier. Our first target is to make your installation safer, easier-to-control and to help you improve cost productivity.

SAFETY:
- DUOBLOC: 4-6 cylinder connections possible w/o extension - to improve the global system tightness of the process and reduce leakage points. Also, with the DUOBLOC concept you can purge independently each side. The purge can also be collected.
- RELIEF VALVE: all supply and switchover boards are standardly equipped with a relief valve (one on semi-automatic version, 2 on fully automatic version).
- INVERTER (full automatic)/BYPASS DESIGN (semi automatic): Its design avoids gas flow into the other side.
- Dedicated pressure gauges (HP and LP). Contact gauges could also be mounted in order to connect to an alarm box.
- With installation of a gas monitoring system, you can easily check your gas consumption from your desk.

EASE OF HANDLING:
- Easy access of purging and isolation valve.
- Easy installation with all components pre-mounted on an Omega plate.
- All components for service are easily accessible.

LOWER OPERATING COSTS:
- A continuous gas supply to the process means less production interruptions or unplanned disruption to change gas cylinders.
- Larger cylinders together = fewer cylinders = lower rental charge, less transportation charge, better cylinder management.
- Grouping all cylinders in one location means also space saving in production area or in lab which are very expensive surfaces.

MANUAL SWITCHOVER BOARDS

A **manual switchover board** reduces the cylinder pressure to an appointed secondary pressure and insures gas supply from different high-pressure sources. It ensures a safe cylinder replacement.

When one high-pressure supply source is in service, the other is in reserve.

When the service source is empty, the operator must change the service side to the reserve side manually when changing the empty cylinder

ALL RIGHTS OF CHANGE RESERVED

TECHNOLOGY OVERVIEW

AUTOMATIC SWITCHOVER BOARD WITH MANUAL RESET

An **automatic Switchover board with manual reset** is a system which provides a continuous gas supply to the piping system. One source of gas is used as the primary source, while a second source is held in reserve.

When the primary source reaches a predetermined pressure, the reserve supply automatically begins to supply gas to the system.

Once the Switchover occurs and primary source is replaced, the Switchover board is reset, such that the reserve supply supplying gas is now designated as primary source and the secondary source is now held in reserve. The empty cylinder can be replaced without interrupting the gas flow.

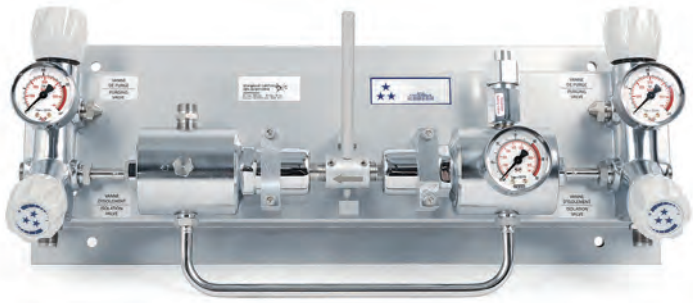

ALL RIGHTS OF CHANGE RESERVED

TECHNOLOGY OVERVIEW (continued)

PREMIUM QUALITY FOR BETTER PERFORMANCE

All our regulators are designed respecting the EN ISO 2503. The production of the regulator is certified according to ISO 9001. Also external audits from customers help us to improve continually our products. This strategy is also applied on our supplier base which is working very closely with us in order to reach new standards and new performance.

In order to fulfil the customer expectations regarding quality, Rotarex implements state-of-the-art quality management practices used in the automotive industry in order to stay Best In Class.

During the production of your regulator we have several control steps in order to provide you the best quality:

- Supplier Audit in order to control that they fullfill our standards
- 100% cleaning of all parts to O_2 standards
- Steaming of some specific components
- Measurement control of parts coming from the production
- 100% Helium leak test
- 100% functional test

Most of the supply and Switchover boards produced by Rotarex are designed for applications with gas purity up to 6.0 with a leak rate of 10^{-8} mbar l/s of helium.

FLOW MEASUREMENTS

Flow curves are based on the ISO EN 2503 Norm. The nominal flow are specified for the nominal inlet pressure with the regulator set at the nominal outlet pressure. The outlet flow will then decrease when the regulator is set at a lower outlet pressure than the nominal one.

For specific applications, do not hesitate to contact us to get the exact flow at the designed values.

SERVICE

In order to prevent possible contamination, we recommend that the operator performs a purging after the cylinder change. This maintenance step will help remove moisture, air and other impurities from the system before introduction of gas into the process. This maintains a constant purity in the circuit.

For some products like our supply/ Switchover boards, it is recommended to perform an annual maintenance in order to prevent wearing of some components. Our customer service team remains at your disposal to supply special spare parts.

SAFETY

All products are tested under pressure and also leak-tested before shipment. Our high pressure regulators are also equipped with relief valves in order to prevent any damage of the regulator.

Important notice: the relief valve fitted on our regulators will only protect the regulator in case of accident and cannot be used to protect the down stream process. When it is needed to protect the down stream process, use a CE relief valve on the pipe work.
It is also possible to collect the purge on our equipment in order to avoid any gas dispersion in the atmosphere when using toxic gas.

ALL RIGHTS OF CHANGE RESERVED

TECHNOLOGY OVERVIEW (continued)

PRESSURE REGULATOR TECHNOLOGIES

Rotarex Supply Panels and Switchover Panels use 3 main pressure regulator technologies to achieve a stable and reliable pressure regulation:

BALANCED VALVE

- Best-in-class pressure stability
- Minimizes the effect of inlet pressure fluctuations on outlet pressure
- Increases regulator lifetime and reduces cost of ownership by reducing seat effort
- Diaphragm technology only

DIAPHRAGM

- Our most-used technology (cylinder regulation, line, supply panel...)
- Compact design
- Good precision

PISTON

- Stable outlet flow
- Used for regulator where the pressure outlet is close to the inlet pressure

BALANCED VALVE TECHNOLOGY

Our **Balanced-Valve Technology regulator** gives you dual stage regulator performance in a single stage design. Due to its proprietary design, it is able to balance the internal forces within the regulator and compensates for the pressure fluctuation on the inlet. It provides a constant outlet pressure like a dual stage regulator but with a lower total ownership cost.

Switchover boards equipped with this technology don't need any line regulator afterwards and can be connected directly to the application.

PRODUCT FINDER

ROTAREX supply boards using BV technology

Series MOD	P. 020
Series CM 504	P. 028

ROTAREX switchover boards using BV technology

Series CEN	P. 030
Series TD 500	P. 040

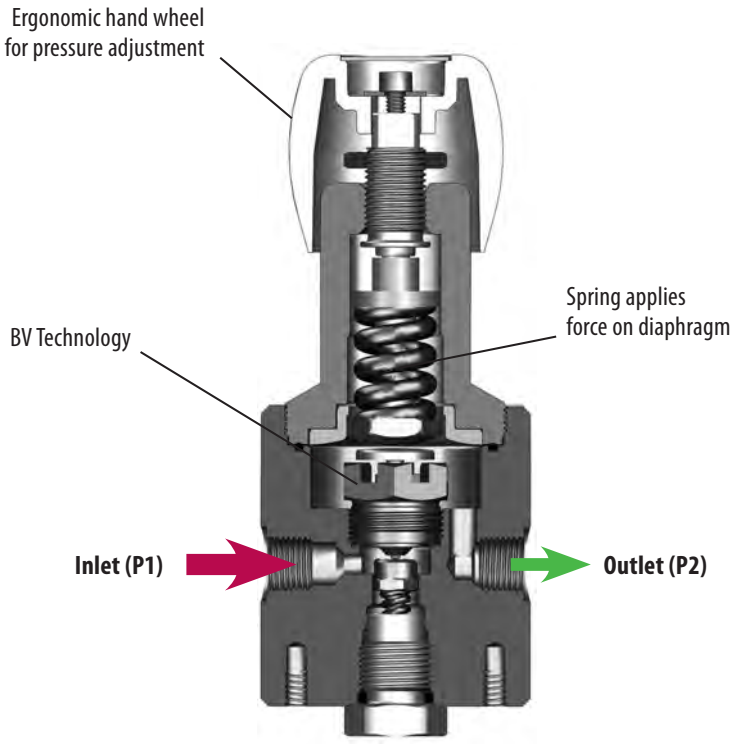

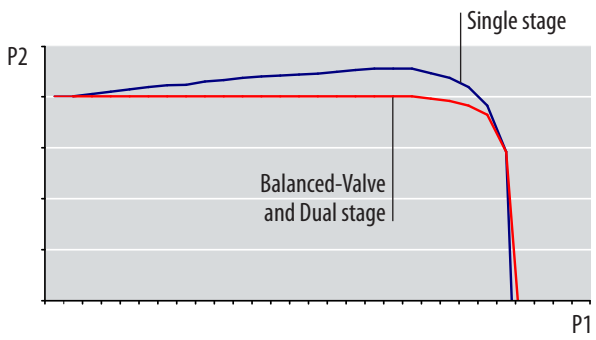

ALL RIGHTS OF CHANGE RESERVED

TECHNOLOGY OVERVIEW (continued)

CARTRIDGE REGULATOR

Superior technical performance with cartridge technology:
- Better outlet pressure stability due to the cartridge design. Outlet pressure remains stable despite any fluctuation of inlet pressure.
- Longer product life due to less impingement on the diaphragm.
- Compact design with reduction of dead volume (minimal purge requirements)
- Sintered inlet filter provides better filtration without restricting flow.

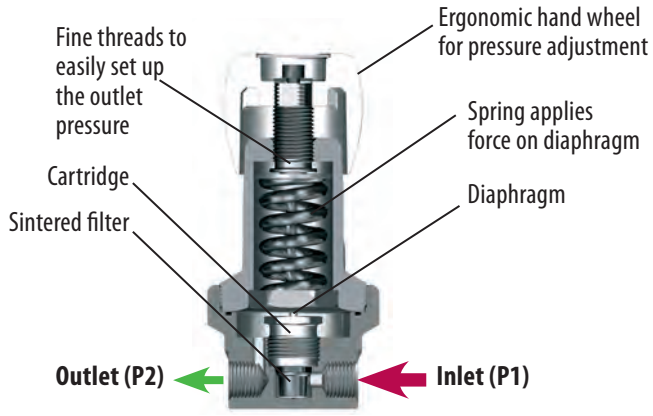

PRODUCT FINDER

ROTAREX supply boards using cartridge technology

Series CM 280/380	P. 018

DIAPHRAGM REGULATOR

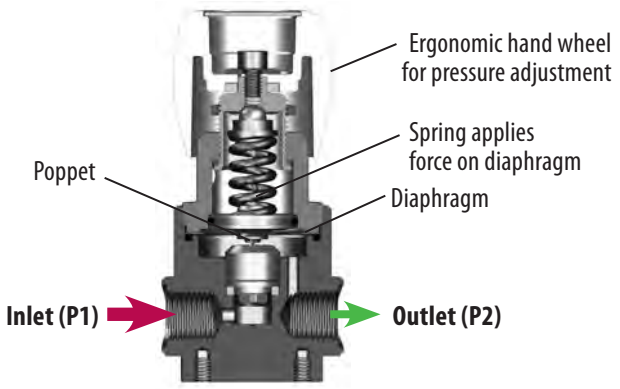

PRODUCT FINDER

ROTAREX supply boards using diaphragm technology

Series CM 104	P. 022
Series CM 104 UC	P. 024

ROTAREX switchover boards using diaphragm technology

Series TD 100	P. 032
Series TD 102 UC	P. 034
Series TD 200	P. 036

PISTON REGULATOR

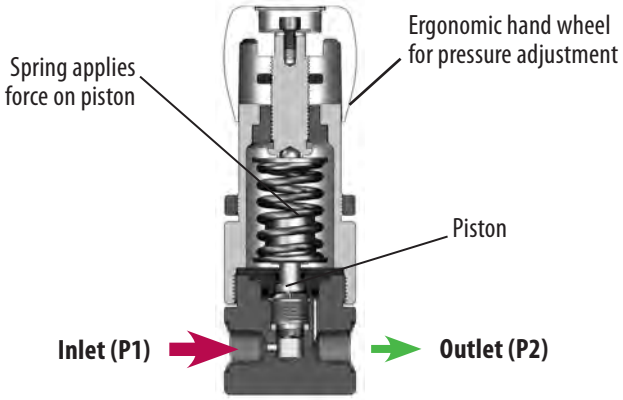

PRODUCT FINDER

ROTAREX supply boards using piston technology

Series CM 245/454	P. 026

ALL RIGHTS OF CHANGE RESERVED

SELECTING THE RIGHT SUPPLY SYSTEM

To choose the right supply solution for your application and get the best results, you should identify the following technical parameters:

TECHNICAL PARAMETER	EXAMPLE
Gas	Inert, flammable, oxidizing, corrosive, toxic
Purity	UHP, HP, industrial, medical, diving
Nominal inlet pressure	Bar or psig
Nominal outlet pressure	Bar or psig
Nominal flow (N_2)	Nm^3/h, Nlpm, Slpm or SCFM
Single stage or dual stage ?	Dual stage or BV Technology are needed where pressure stability is essential
Product	Regulator, point of use, supply board, switchover board
Material	Brass, chrome plated brass, stainless steel
Inlet connection	Country of use, standard, connection
Outlet connection	G ⅜, ¼ NPT, male, female, special
Gauges	Low pressure, high pressure, sliding, inductive
Safety device	Yes/no
Vacuum	Yes/no
Application	Food, electronic, medical, welding, industrial, diving…
Outdoor or indoor use	Environment
Temperature range	-20°C to +60°C / -4° F to +140°F
Atex use	Yes/no
Preset outlet pressure	If yes, which pressure ?
Marking	CE, TPED, PI

Each product page is designed to provide you the essential technical information at a glance:

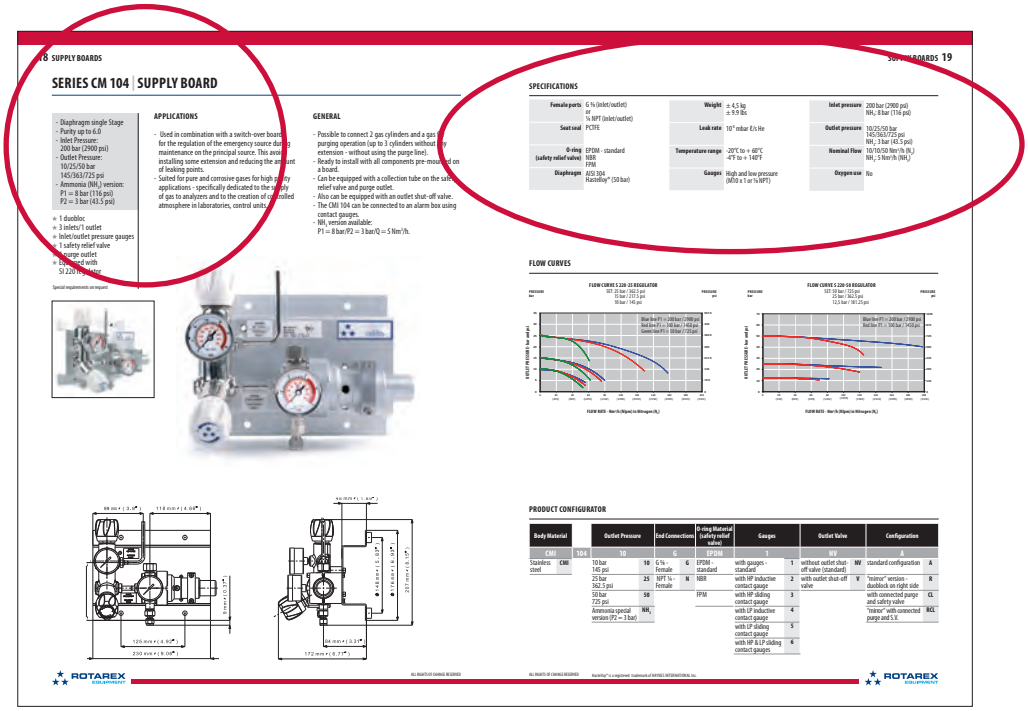

ALL RIGHTS OF CHANGE RESERVED

SELECTING THE RIGHT SUPPLY SYSTEM (continued)

BODY MATERIALS

Most Rotarex Supply and Switchover Boards are available in stainless steel 316L or chrome plated brass, and on some models, raw brass or aluminium. Which material is best for your installation?

Stainless steel 316L: The recommended option for corrosive gases and high-purity applications due to its superior resistence, non-reactivity, exceptional durability and high-surface finish properties. It is compatible with most gas types and low-velocity oxygen applications.

Rotarex uses stainless steel type 316L, an austentic chromium nickel stainless steel containing Molybdenum. It offers:
- Exceptional corrosion resistance - particularly against sulfuric, hydrochloric; acetic, formic and tartaric acids, acid sulfates and alkaline chlorides
- resistance to pitting from chloride-ion solutions
- outstanding strength even at elevated temperatures

Chrome plated or Raw Brass: The most commonly used material for industrial and high velocity oxygen applications due to its cost effectiveness versus stainless steel, good strength, resistence and low-friction flow properties.

Need more information? You can find more detail about optional, materials on our website. Additionally, one of our material engineers would be happy to discuss the pros and cons of each option to help you choose the best solution.

www.rotarex.com

Gas Compatibility: Make sure the body material is compatible with the gas type you will be using. Consult the gas compatibility reference chart on page 62.

O-RING MATERIALS

For many regulators, a choice of O-ring materials is available:

EPDM:	Ethylene Propylene Rubber
NBR:	Nitrile Butadiene Rubber
FPM:	Fluorocarbon Rubber
PTFE:	Polytetrafluoroethylene (cartridge)

Gas Compatibility: Make sure the O-ring material is compatible with the gas type you will be using. Consult the gas compatibility reference chart on page 62.

INLET/OUTLET PRESSURES

Different models are designed for different inlet and outlet pressure performance. The available options are clearly indicated on each product page. Please specify which inlet and outlet pressure when ordering. We can also accommodate special requests.

PRESSURE GAUGES

Most Rotarex supply and switchover boards are equipped with a choice of pressure gauges. High Pressure and/or Low Pressure - and sliding or induction versions. Check the product configurator table on each product page.

ALL RIGHTS OF CHANGE RESERVED

SELECTING THE RIGHT SUPPLY SYSTEM (continued)

RELIEF VALVE

Relief valves are standard on most Rotarex supply and switchover boards as a safety best practice.

SEAL MATERIAL

For all cartridge regulators the seat seal is PCTFE which provides a wide chemical compatibility, good temperature resistance, and better dimensional stability than traditional seals.

DIAPHRAGM MATERIAL

All cartridge regulators are equipped with a Hastelloy® diaphragm, which is ideally adapted to high purity applications and is compatible with all types of gases , and has exceptional elasticity and high corrosion resistance. Consequently, this diaphragm outperforms traditional stainless steel diaphragms in terms of pressure stability and long cycle lifetime.

FILTER MATERIAL

Rotarex cartridge regulators employ a Sintered Filter in 316L for the stainless steel and bronze for brass version.

The function of this filter is to protect the regulator against foreign particle coming from the gas or during installation. In any case a filter has to be installed on the line based on your cleanliness requirements.

OTHER PRODUCT OPTIONS

Some product solutions have additional options specific to their unique application, such as contact gauges, outlet valves, configuration… etc.

These options are clearly indicated on the product configuration table on each product page .

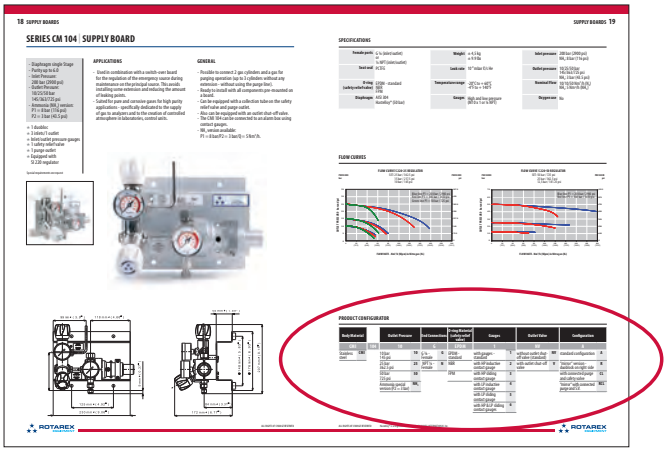

CLEANING

All products, regardless of gas application, are cleaned to remove all traces of residue and grease using the same procedures as for O_2 use. There is no need to specify special cleaning when ordering.

Important notice: the safety relief valve fitted on our regulators will only protect the regulator in case of accident and cannot be used to protect the down stream process. When it is needed to protect the down stream process, use a CE relief valve on the pipe work.

ALL RIGHTS OF CHANGE RESERVED

NOTES

ALL RIGHTS OF CHANGE RESERVED

SERIES CMC 280 / CMC 380 | SUPPLY BOARD

- Cartridge single stage
- Purity up to 6.0
- Inlet pressure:
  230 bar (3335 psig)
  or 300 bar (4350 psig)
- Outlet pressure:
  10 / 16 / 35 / 50 bar
  145 / 232 / 508 / 725 psig

★ Inlet/outlet pressure gauges
★ 1 relief valve
★ 1 purge outlet
★ 0_2 compatible
(see technical data)
★ Regulator with
cartridge technoloy

Special requirements on request

APPLICATIONS

- Ideally suited for pure and corrosive gases for high purity applications dedicated to the supply of gas to analyzers and to the creation of controlled atmosphere in laboratories, control units, and for petrochemical applications where high flows are required
- Used in combination with a switchover board for the regulation of the emergency source during maintenance on the principal source. This avoids installing some extension and reducing the amount of leaking points

KEY FEATURES

- Ready to install with all components pre-mounted on a board.
- Best-in-class pressure stability with Cartridge Technology: the effect of inlet pressure fluctuations on outlet pressure are minimized. Cartridge Technology enables the delivery of a very stable outlet pressure and flow even with high flow line regulators.
- Cartridge technology increases regulator life and reduces ownership costs.
- Can be equipped with a collection tube on the relief valve and purge outlet.
- Can also be equipped with an outlet shut-off valve.
- The CMC 280 / CMC 380 can be connected to an alarm box using contact gauges.

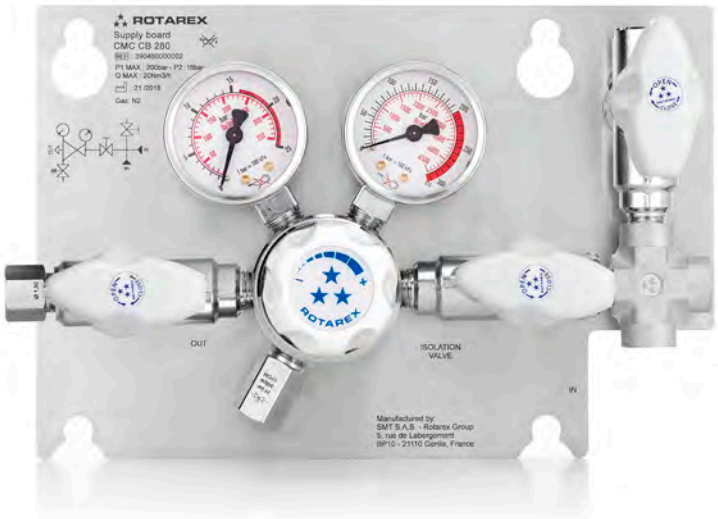

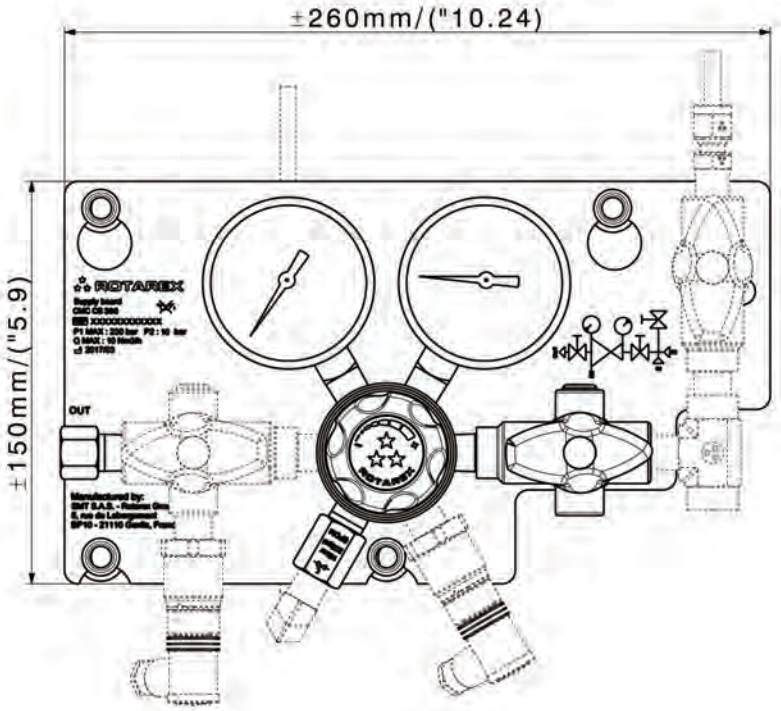

Dotted lines = Full options

ALL RIGHTS OF CHANGE RESERVED

SPECIFICATIONS

Inlet / outlet ports	¼ NPT
O-ring	EPDM - standard FPM
Diaphragm	Hastelloy®

Leak rate	10^{-8} mbar ℓ/s He
Temperature range	-20°C to + 60°C -4°F to + 140°F
Nominal Flow	Up to 30 Nm3/h (N_2) depending on outlet pressure
Gauges	¼ NPT

Inlet pressure	230 / 300 bar 3335 / 4350 psig
Outlet pressure	10 / 16 / 35 / 50 bar 145 / 232 / 508 / 725 psig
Oxygen use	Only with brass and inlet pressure 230 bar

PRODUCT CONFIGURATOR

	Body Material		Inlet Pressure		Outlet Pressure		Outlet Valve		Purge		Measurement		Sensors		Configurations		Gas*	
CMC	CB / SS		280		16		V		P		M63		0		S		N_2	
	Chrome plated brass	CB	230 bar 3335 psig	280	10 bar 145 psig	10	Outlet valve ¼ NPT	V	With purge valves	P	Pressure gauge (63 mm)	M63	Pressure sensor HP	HP	Standard	S	N_2	N2
	Stainless steel	SS	300 bar 4350 psig	380	16 bar 232 psig	16	None	0	Without purge valves	0	Contact gauges HP (50 mm)	CGH 50	Pressure sensor LP	LP	Collected safety relief valve and purge	CL	Ar	Ar
	Raw brass	RB			35 bar 508 psig	35					Contact gauges LP (50 mm)	CGL 50	Pressure sensor HP+LP	HLP			O_2	O2
					50 bar 725 psig	50					Contact gauges LP+HP (50 mm)	CGHL 50	None	0			CO_2	CO2
																	N_2O	N20
																	He	He
																	H_2	H2

*Other gases on demand

ALL RIGHTS OF CHANGE RESERVED

SERIES CM 280 - CM 380 | SUPPLY BOARD

- Cartridge single stage
- Purity up to 6.0
- Inlet pressure:
  200 bar (2900 psig)
  or 300 bar (4350 psig)
- Outlet pressure:
  10/16/35 bar
  145/232/508 psig

★ Inlet/outlet pressure gauges
★ 1 relief valve
★ 1 purge outlet
(type 2 and 3)
★ 0_2 compatible
(see technical data)
★ Regulator with
cartridge technoloy

Special requirements on request

APPLICATIONS

- Ideally suited for pure and corrosive gases for high purity applications dedicated to the supply of gas to analyzers and to the creation of controlled atmosphere in laboratories, control units, and for petrochemical applications where high flows are required
- Used in combination with a Switchover board for the regulation of the emergency source during maintenance on the principal source. This avoids installing some extension and reducing the amount of leaking points

KEY FEATURES

- Ready to install with all components pre-mounted on a board.
- Best-in-class pressure stability with Cartridge Technology: the effect of inlet pressure fluctuations on outlet pressure are minimized. Cartridge Technology enables the delivery of a very stable outlet pressure and flow even with high flow line regulators.
- Cartridge technology increases regulator life and reduces ownership costs.
- Can be equipped with a collection tube on the relief valve and purge outlet.
- Can also be equipped with an outlet shut-off valve.
- The CM 280 – CM 380 can be connected to an alarm box using contact gauges.
- Can be equiped with diaphragm ¼ turn valve (CMC version) or with duobloc (CM version)

VERSION TYPE 3

Supply board with duobloc

DUO-BLOC TECHNOLOGY

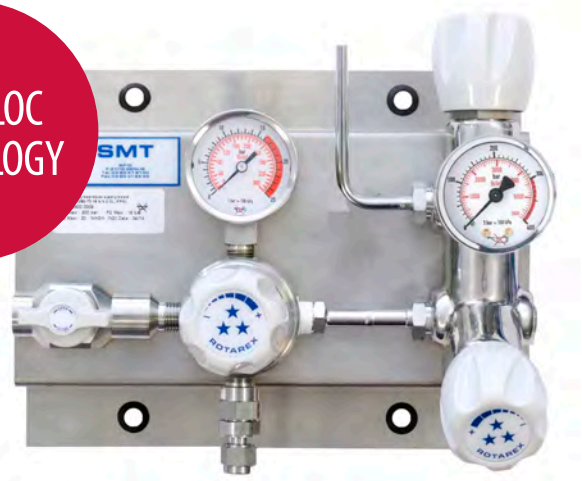

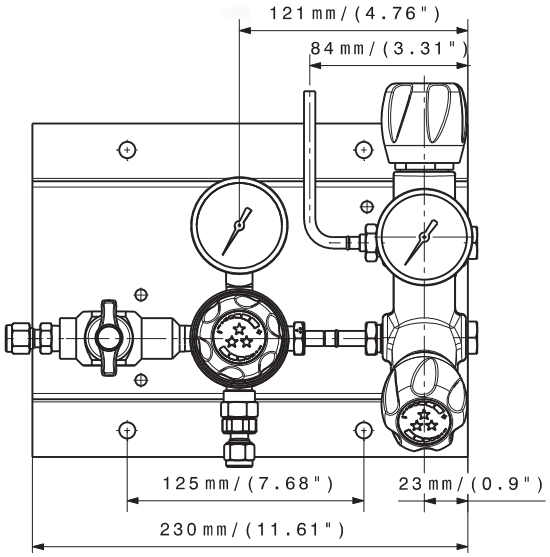

ALL RIGHTS OF CHANGE RESERVED

SPECIFICATIONS

Female ports	¼" NPT (Inlet/Outlet)	**Weight**	± 2,9 kg (CM-1) / 4,5 kg (CM-2) / 4,8 kg (CM-3) ± 6.3 lbs / 9.9 lbs / 10.5 lbs	**Intle pressure**	200/300 bar 2900/4350 psig
Seat seal	PCTFE	**Leak rate**	10^{-8} mbar ℓ/s He	**Outlet pressure**	10/16/35/50 bar 145/232/507.5 psig
Seal material	PTFE	**Temperature range**	20°C to + 60°C 4°F to + 140°F	**Nominal Flow CV**	10/20/30 Nm^3/h (N_2) 0.1
Diaphragm	Hastelloy®	**Gauges**	High and low pressure (¼" NPT)	**Oxygen use**	Ok with Brass and Stainless Steel

PRODUCT CONFIGURATOR - WITH DUOBLOC

	Body Material		Inlet Pressure		Version type		Outlet Pressure		Inlet Connection		Outlet Connection		Gauges		Purge		Gas Type
CM	L		280		T3		10		N		6		1		0		N2
	Chrome plated brass	L	200 bar 2900 psig	280	Type 3	T3	10 bar 145 psig	10	¼ NPT	N	¼ NPT	N	With standard gauges	1	Without	0	
	Stainless Steel	I	300 bar 4350 psig	380			16 bar 232 psig	16					HP inductive contact gauge	2	With connected purge and relief valve*	CL	
							35 bar 507.5 psig	35									
							50 bar 725 psig	50									

ALL RIGHTS OF CHANGE RESERVED

SERIES MOD | SUPPLY BOARD

- Diaphragm single stage
- Balanced-Valve Technology
- Purity up to 5.5 (6.0 without the ball valve)
- Inlet pressure: 200 bar (2900 psig) or 300 bar (4350 psig)
- Outlet pressure: 10/16/30/50 bar 145/232/435/725 psig

★ 1 duobloc
★ 3 inlets/1 outlet
★ Inlet/outlet pressure gauges
★ 1 relief valve
★ 1 purge outlet
★ O_2 application compatible (see technical data)
★ Acetylene version available
★ Propane version available

Special requirements on request

APPLICATIONS

- Used in combination with a switchover board for the regulation of the emergency source during maintenance on the principal source. This avoids installing extensions and reduces the amount of leaking points.
- Suitable for the high flow supply of industrial gases except toxic and corrosive gases.

KEY FEATURES

- Possible to connect 2 gas cylinders and a gas for purging operation (up to 3 cylinders without any extension - without using the purge line).
- Ready to install: all components are pre-mounted on a board.
- Best-of-class pressure stability with Balanced-Valve Technology: the effect of inlet pressure fluctuations on outlet pressure are minimized. Balanced-Valve Technology enables the delivery of a very stable outlet pressure and flow even with high flow line regulators.
- Non-whipping filter improves safety of the operator during the cylinder replacement.
- Can be equipped with an outlet ¼ turn shut-off valve (Multi-turn valve with 30 bar or 50 bar version for oxygen use).
- Can be connected to an alarm box using contact gauges.
- Acetylene version available: P1 = 25 bar / P2 = 1 bar/Q = 6,5 Nm^3/h.
- For use with acetylene this product must be installed with a flash back arrestor complying with the standard EN 730 located downstream.
- Propane version available: P1 = 25 bar/P2 = 4 bar/Q = 10 Nm^3/h.

3 inlet ports

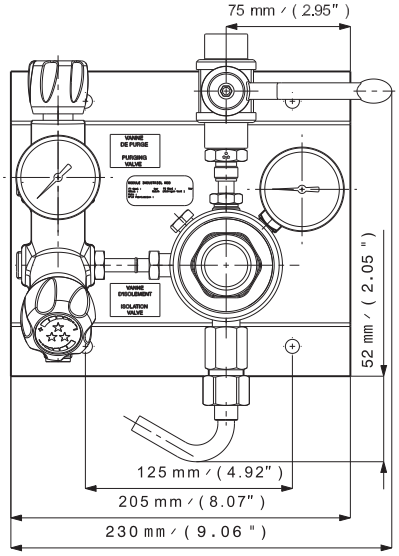

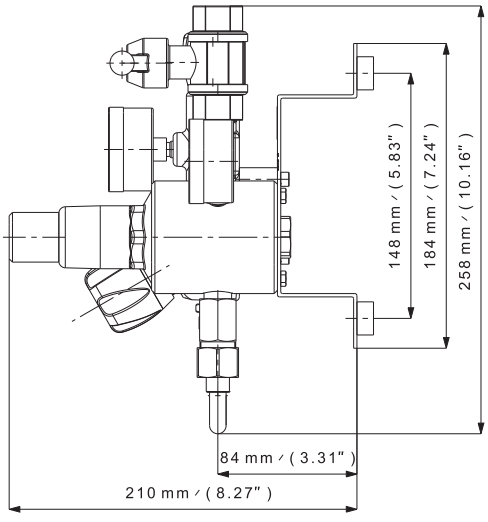

ALL RIGHTS OF CHANGE RESERVED

SPECIFICATIONS

Female ports	In: G ⅜ - Out: G ½ In: ⅜ NPT - Out: G ½
Seat seal	PCTFE
O-ring	EPDM - Standard FPM
Diaphragm (regulator)	AISI 304 or Hastelloy®
Weight	± 6,0 kg ± 13.0 lbs

Leak rate	w/outlet valve: 1.10^{-4} mbar ℓ/s He w/o outlet valve: 1.10^{-8} mbar ℓ/s He
Temperature range	-20°C to + 60°C -4°F to + 140°F
Gauges	High and low pressure (M10 x 1 or G ¼)

Inlet pressure	200 bar / 300 bar 2900 psig / 4350 psig AD and PR4: 25 bar (362.5 psig)
Outlet pressure	10/16/30/50 bar 145/232/435/725 psig AD: 1 bar (14.5 psig) PR4: 4 bar (58 psig)
Nominal Flow 200 bar version	70/110/150/180 Nm³/h (N_2)
Nominal Flow 300 bar version	50/70/100/130 Nm³/h (N_2)
Nominal Flow AD and PR4	AD: 6,5 Nm³/h PR4: 10 Nm³/h
Oxygen use	OK with inlet pressure 200 and 300 bar

FLOW CURVES

FLOW CURVE MOD-10 REGULATOR

SET: 10 bar / 145 psig
5 bar / 72.5 psig
2,5 bar / 36.35 psig

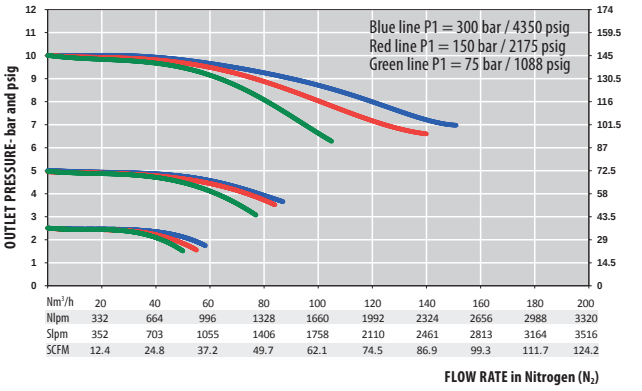

FLOW CURVE MOD-16 REGULATOR

SET: 16 bar / 232 psig
8 bar / 116 psig
4 bar / 58 psig

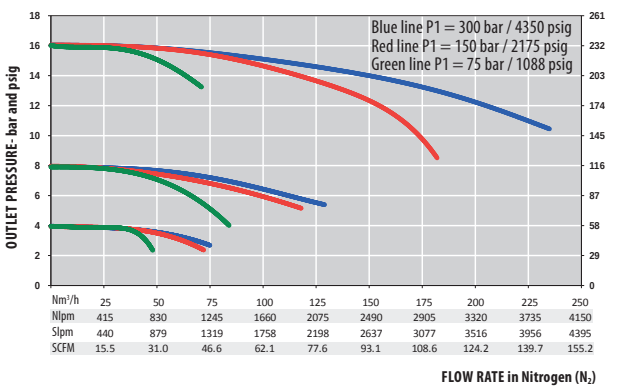

PRODUCT CONFIGURATOR

Inlet pressure		Outlet		Body Material		End Connections		O-ring Material	Gauges		Fix or adjustable Outlet Pressure		Oulet valve		Configuration	
MOD300		16		L		G		EPDM	1		FX		V		A	
200 bar 2900 psig	200	10 bar 145 psig	10	Raw brass	LB	In: G ⅜ Out: G ½ Female	G	EPDM - Standard	With gauges - standard	1	With fixed P2 (standard)	FX	With outlet shut-off valve	V	Standard configuration	A
300 bar 4350 psig	300	16 bar 232 psig	16	Chrome plated brass	L	In: ⅜ NPT Out: G ½ Female	N	FPM	With HP inductive contact gauge	2	With adjustable P2 (handwheel)	ADJ				
		30 bar 435 psig	30													
		30 bar 435 psig oxygen use	30 OX													
		50 bar 725 psig	50													
		50 bar 725 psig oxygen use	50 OX													
		Acetylene special version (P2 = 1 bar)	AD													
		Propane special version (P2 = 4 bar)	PR4													

ALL RIGHTS OF CHANGE RESERVED

SERIES CM 104 | SUPPLY BOARD

- Diaphragm single Stage
- Purity up to 6.0
- Inlet Pressure:
  200 bar (2900 psig)
- Outlet Pressure:
  10/25/50 bar
  145/363/725 psig
- Ammonia (NH_3) version:
  P1 = 8 bar (116 psig)
  P2 = 3 bar (43.5 psig)

★ 1 duobloc
★ 3 inlets/1 outlet
★ Inlet/outlet pressure gauges
★ 1 relief valve
★ 1 purge outlet
★ Equipped with
SI 220 regulator
★ Only in stainless steel

Special requirements on request

3 inlet ports

APPLICATIONS

- Used in combination with a switchover board for the regulation of the emergency source during maintenance on the principal source. This avoids installing some extension and reducing the amount of leaking points.
- Suited for pure and corrosive gases for high purity applications
- Specifically dedicated to the supply of gas to analyzers and to the creation of controlled atmosphere in laboratories, control units.

KEY FEATURES

- Possible to connect 2 gas cylinders and a gas for purging operation (up to 3 cylinders without any extension - without using the purge line).
- Ready to install with all components pre-mounted on a board.
- Can be equipped with a collection tube on the relief valve and purge outlet.
- Also can be equipped with an outlet shut-off valve.
- The CMI 104 can be connected to an alarm box using contact gauges.
- NH_3 version available:
  P1 = 8 bar/P2 = 3 bar/Q = 5 Nm^3/h.

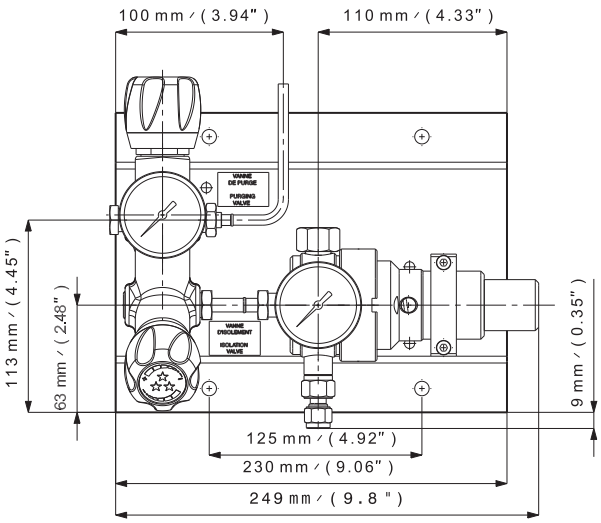

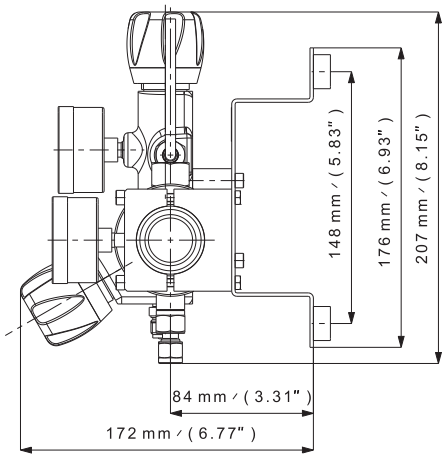

ALL RIGHTS OF CHANGE RESERVED

SPECIFICATIONS

Female ports	G ⅜ (inlet/outlet) or ¼ NPT (inlet/outlet)	**Weight**	± 4,5 kg ± 9.9 lbs	**Inlet pressure**	200 bar (2900 psig) NH_3: 8 bar (116 psig)
Seat seal	PCTFE	**Leak rate**	10^{-8} mbar ℓ/s He	**Outlet pressure**	10/25/50 bar 145/363/725 psig NH_3: 3 bar (43.5 psig)
O-ring (relief valve)	EPDM - standard FPM	**Temperature range**	-20°C to + 60°C -4°F to + 140°F	**Nominal Flow**	10/10/50 Nm^3/h (N_2) NH_3: 5 Nm^3/h (NH_3)
Diaphragm	AISI 304 Hastelloy® (50 bar)	**Gauges**	High and low pressure (M10 x 1 or ⅛ NPT)	**Oxygen use**	No

FLOW CURVES

FLOW CURVE CM 104-25 REGULATOR

SET: 25 bar / 362.5 psig
15 bar / 217.5 psig
10 bar / 145 psig

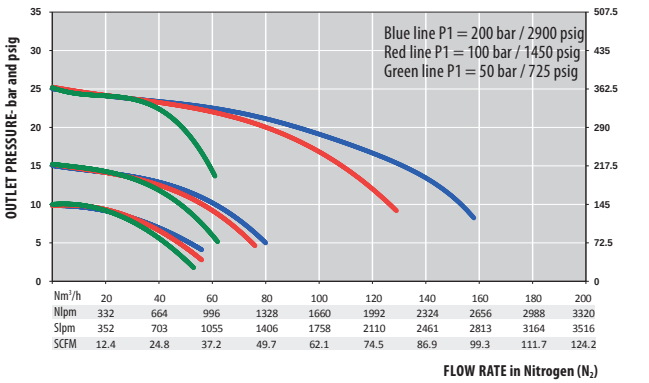

FLOW CURVE CM 104-50 REGULATOR

SET: 50 bar / 725 psig
25 bar / 362.5 psig
12,5 bar / 181.25 psig

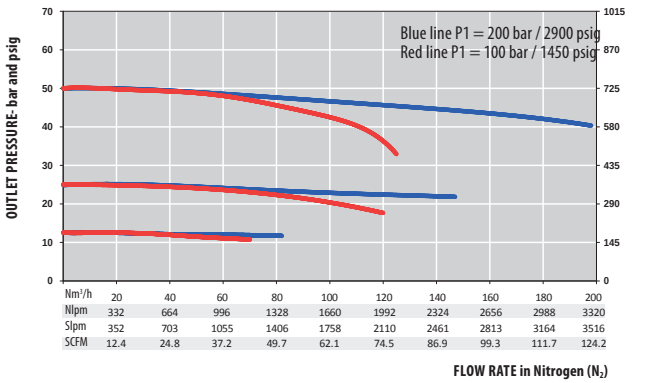

PRODUCT CONFIGURATOR

Body Material			Outlet Pressure		End Connections		O-ring Material (relief valve)	Gauges		Outlet Valve		Configuration	
CMI		104	10		G		EPDM	1		NV		A	
Stainless steel	CMI		10 bar 145 psig	10	G ⅜ - Female	G	EPDM - standard	with gauges - standard	1	without outlet shut-off valve (standard)	NV	standard configuration	A
			25 bar 362.5 psig	25	¼ NPT - Female	N	FPM	with HP inductive contact gauge	2	with outlet shut-off valve	V	with connected purge and safety valve	CL
			50 bar 725 psig	50									
			Ammonia special version (P2 = 3 bar)	NH_3									

ALL RIGHTS OF CHANGE RESERVED

SERIES CM 454 | SUPPLY BOARD

- Piston single stage
- Purity up to 6.0
- Inlet Pressure: 200 bar (2900 psig)
- Outlet Pressure: 160 bar (2320 psig)

★ 1 duobloc
★ 3 inlets/1 outlet
★ Inlet/outlet pressure gauges
★ 1 purge outlet
★ O_2 application compatible
★ SL 400 regulator integrated (CM 454)

Special requirements on request

APPLICATIONS

- Ideally suited for pure gases for high purity applications to put vessels under pressure and for leak detection and purge of pipe work.
- Used in combination with a switchover board for the regulation of the emergency source during maintenance on the principal source. This avoids installing some extension and reducing the amount of leaking points.

KEY FEATURES

- Adjustable outlet pressure
- Possible to connect 2 gas cylinders and a gas for purging operation (up to 3 cylinders without any extension - without using the purge line).
- Ready to install with all components pre-mounted on a board.
- Connectable to an alarm box using contact gauges.
- Equipped with a ¼ turn shut-off valve on the outlet.
- Collection tube available on the relief valve and purge outlet.
- Downstream regulation system can be decompressed by turning the hand wheel counter-clockwise.

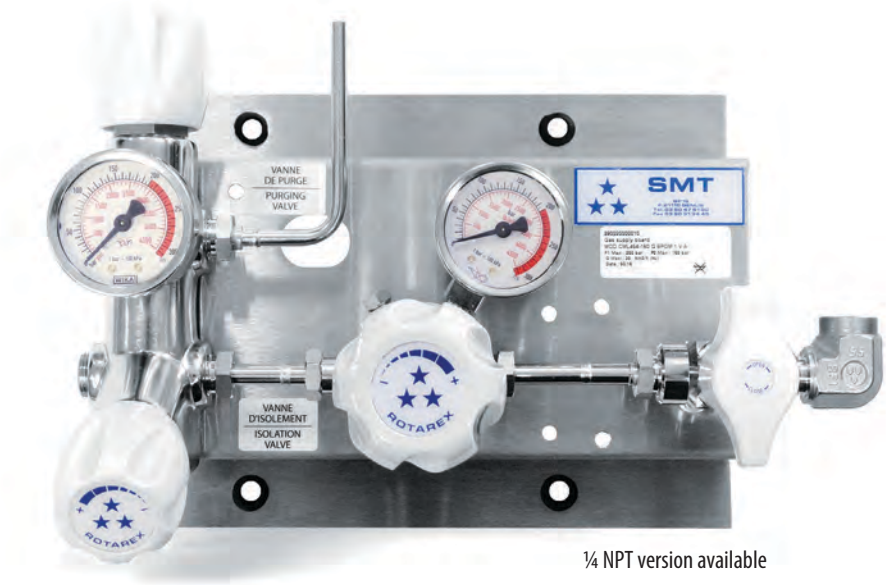

¼ NPT version available

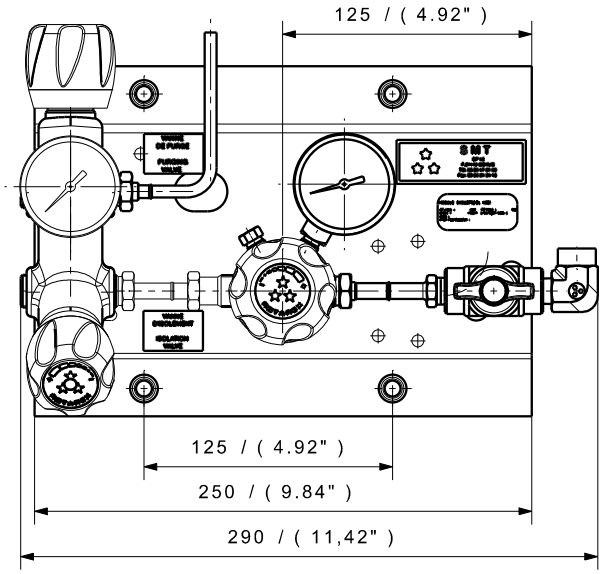

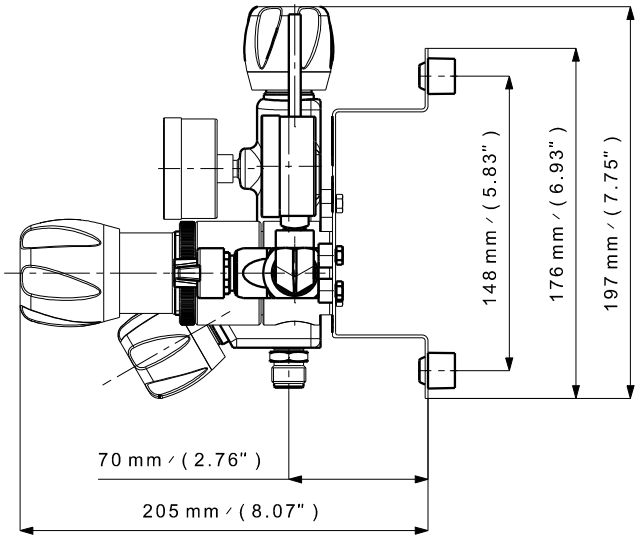

ALL RIGHTS OF CHANGE RESERVED

SPECIFICATIONS

Female ports	G ⅜ (inlet/outlet)	**Weight**	± 4,5 kg ± 9.9 lbs	**Inlet pressure**	200 bar 2900 psig
Seat seal	PCTFE	**Leak rate**	10^{-8} mbar ℓ/s He	**Outlet pressure**	160 bar 2320 psig
O-ring	EPDM - standard FPM	**Temperature range**	-20°C to + 60°C -4°F to + 140°F	**Nominal Flow**	30 Nm^3/h (N_2)
Piston	AISI 316L	**Gauges**	High and low pressure (M10 x 1)	**Oxygen use**	OK for brass with 200 bar inlet pressure

FLOW CURVES

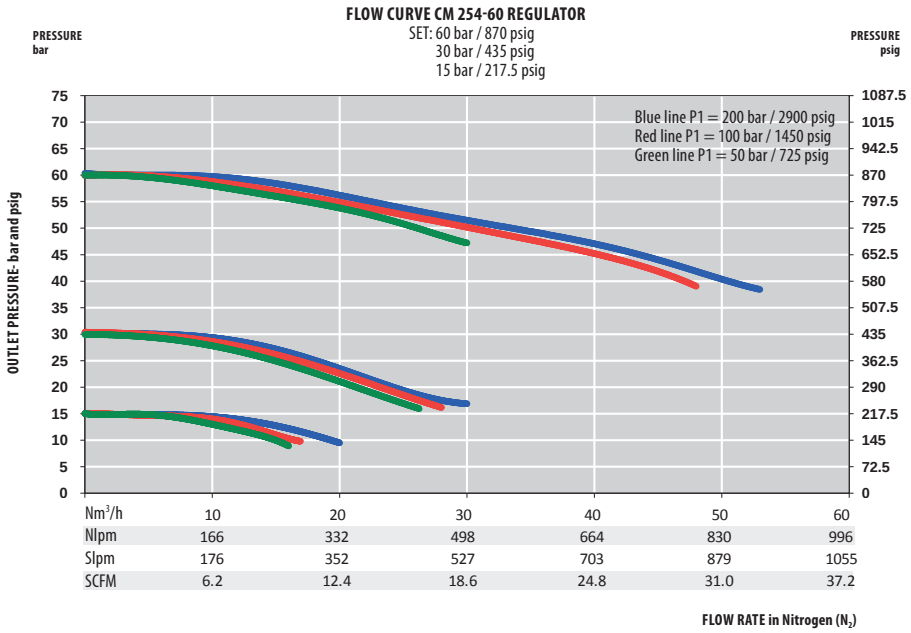

PRODUCT CONFIGURATOR

Body Material		Outlet Pressure		End Connections		O-ring Material	Gauges		Configuration	
CML		454		G		EPDM	1		A	
Chrome Plated Brass	CML	160 bar 2320 psig	454	G ⅜ - Female	G	EPDM	with gauges - standard	1	Standard Configuration	A
				¼ NPT	N	FPM	with HP inductive contact gauge	2	with connected purge and relief valve	CL

ALL RIGHTS OF CHANGE RESERVED

SERIES CC 284 / 384 | AUTOMATIC SWITCHOVER BOARD WITH MANUAL RESET

- Cartridge single stage regulators
- Diaphragm valves
- Purity up to 6.0
- Inlet pressure: 230 bar (3335 psig) or 300 bar (4350 psig)
- Outlet pressure: 10 bar (145 psig) 16 bar (232 psig) or 35 bar (508 psig)

★ 2x2 inlets/1 outlet
★ 1 relief valve
★ 2 purge outlets (optional)
★ Semi-automatic
★ Regulation done by 2 x SC281 cartridge regulator
★ O_2 application compatible (only 200 bar version)

Special requirements on request

Optional connection with Alarm Box

APPLICATIONS

- Ideally suited to insure gas supply from many high pressure sources of high purity non-corrosive gases with low flow (up to 25 Nm^3/h)
- Dedicated to the supply of gas to analyzers and to the creation of controlled atmosphere in laboratories, control units, and for petrochemical applications
- Thanks to the flexible and modular configuration of the switchover board: Possibility to manage inlet source, purging and outlet shut-off functions according to user's needs

KEY FEATURES

- The semi-automatic switchover board insures a continuous gas supply
- Ready to install thanks to pre-mounted components on a panel
- Can be equipped with a collection tube on the relief valve and purge outlet
- Easy handling thanks to visible technical drawings with key functionalities marked on the back plate
- Can be equipped with or without:
  - Outlet shut-off valve
  - Purging valve
- Using contact gauges or pressure sensor, the switchover board can also be connected to an alarm box to indicate the source status
- To connect up to 6 cylinders on each side you can use Rotarex extensions

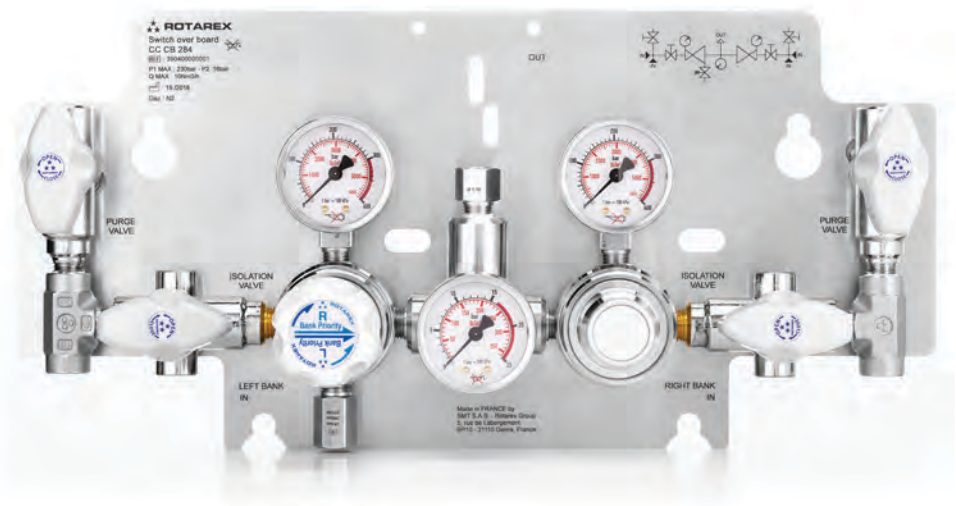

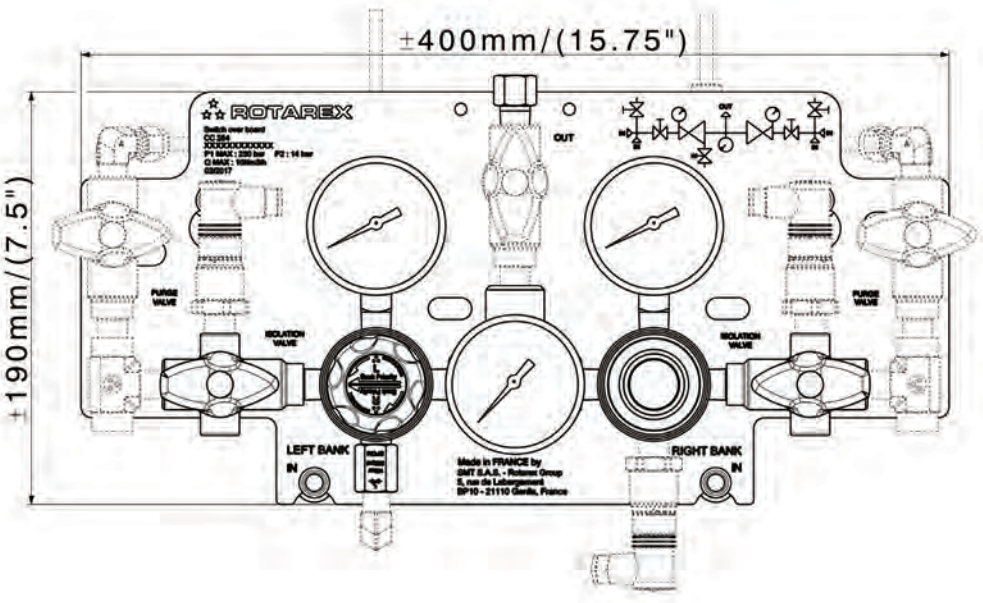

Dotted lines = Full options

ALL RIGHTS OF CHANGE RESERVED

SPECIFICATIONS

Inlet / outlet ports	¼ NPT Other connections available on request
O-ring	EPDM - standard FPM
Diaphragm	Hastelloy®
Leak rate	10^{-8} mbar ℓ/s He
Temperature range	-20°C to + 60°C -4°F to + 140°F
Nominal Flow	Up to 25 Nm^3/h (N_2) depending on outlet pressure
Gauges	¼ NPT
Inlet pressure	230 / 300 bar 3335 / 4350 psig
Outlet pressure	10 / 16 / 35bar 145 / 232 / 508 psig
Oxygen use	Only with brass and inlet pressure 230 bar

PRODUCT CONFIGURATOR

	Body Material		Inlet Pressure		Oulet Pressure		Outlet Valve		Purge		Measurement		Sensors		Configurations		Gas*	
CC	CB / SS		284		16		0		P		M63		0		S		N_2	
	Chrome plated brass	CB	230 bar 3335 psig	284	10 bar 145 psig	10	Outlet valve ¼ NPT	V	With purge valves	P	Pressure gauge (63 mm)	M63	Pressure sensor HP	HP	Standard	S	N_2	N2
	Stainless steel	SS	300 bar 4350 psig	384	16 bar 232 psig	16	None	0	Without purge valves	0	Contact gauges HP (50 mm)	CGH 50	Pressure sensor LP	LP	Collected safety relief valve and purge	CL	Ar	Ar
	Raw brass	RB			35 bar 508 psig	35					Contact gauges LP (50 mm)	CGL 50	Pressure sensor HP+LP	HLP			O_2	O2
											Contact gauges LP+HP (50 mm)	CGHL 50	None	0			CO_2	CO2
																	N_20	N20
																	He	He
																	H_2	H2

*Other gases on demand

ALL RIGHTS OF CHANGE RESERVED

SERIES CC 283/383 | MANUAL SWITCHOVER BOARD

- Cartridge single stage regulators
- Diaphragm valves
- Purity up to 6.0
- Inlet pressure: 230 bar (2900 psig) or 300 bar (4350 psig)
- Outlet pressure: 10 bar (145 psig) 16 bar (232 psig), 35 bar (508 psig) or 50 bar (725 psig)

★ 2x2 inlets/1 outlet
★ 1 relief valve
★ 2 purge outlets (optional)
★ Semi-automatic
★ Regulation done by 1 x SC281 cartridge regulator
★ O_2 application compatible

Special requirements on request

Optional connection with Alarm Box

APPLICATIONS

- Ideally suited to insure gas supply from many high pressure sources of high purity non-corrosive gases with low flow (up to 25 Nm^3/h)
- Dedicated to the supply of gas to analyzers and to the creation of controlled atmosphere in laboratories, control units, and for petrochemical applications
- Thanks to the flexible and modular configuration of the switchover board: Possibility to manage inlet source, purging and outlet shut-off functions according to user's needs

KEY FEATURES

- The manual switchover board insures a regular and accurate gas supply with possibility to manually switch on a second source with the highest safety level
- Ready to install thanks to the pre-mounted components on the back-panel
- Can be equipped with a collection tube on the relief valve and purge outlet
- Easy handling thanks to visible technical drawings with key functionalities marked on the back plate
- Can be equipped with or without:
  - Outlet shut-off valve
  - Purging valve
- Using contact gauges or pressure sensor, the switchover board can also be connected to an alarm box to indicate the source status
- To connect up to 6 cylinders on each side you can use Rotarex extensions

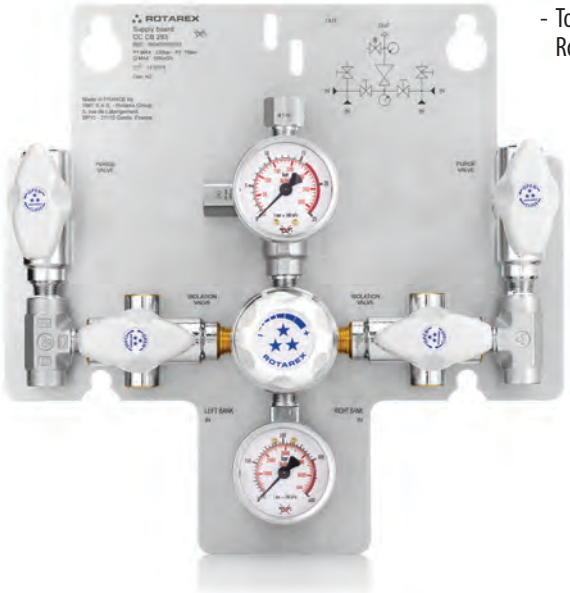

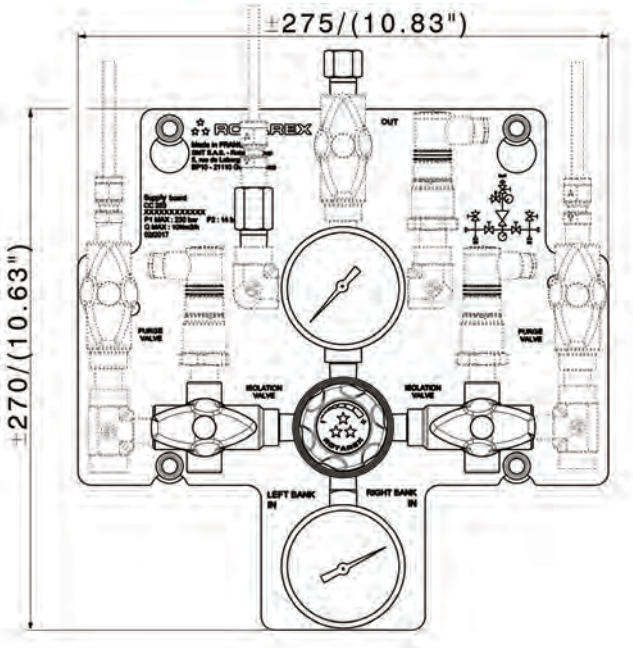

Dotted lines = Full options

ALL RIGHTS OF CHANGE RESERVED

SPECIFICATIONS

Inlet / outlet ports	¼ NPT Other connections available on request	**Temperature range**	-20°C to + 60°C -4°F to + 140°F	**Outlet pressure**	10 / 16 / 35 / 50 bar 145 / 232 / 508 psig
O-ring	EPDM - standard FPM	**Nominal Flow**	Up to 25 Nm^3/h (N_2) depending on outlet pressure	**Oxygen use**	Only with brass and inlet pressure 230 bar
Diaphragm	Hastelloy®	**Gauges**	¼ NPT		
Leak rate	10^{-8} mbar ℓ/s He	**Inlet pressure**	230 / 300 bar 3335 / 4350 psig		

PRODUCT CONFIGURATOR

	Body Material		Inlet Pressure		Outlet pressure		Outlet Valve		Purge		Measurement		Sensors		Configurations		Gas*	
CC	CB / SS		283		16		0		P		M63		0		S		N_2	
	Chrome plated brass	CB	230 bar 3335 psig	283	10 bar 145 psig	10	Outlet valve ¼ NPT	V	With purge valve	P	Pressure gauge (63 mm)	M63	Pressure sensor HP	HP	Standard	S	N_2	N2
	Stainless steel	SS	300 bar 4350 psig	383	16 bar 232 psig	16	None	0	Without purge valve	0	Contact gauges HP (50 mm)	CGH 50	Pressure sensor LP	LP	Collected safety relief valve and purge	CL	Ar	Ar
	Raw brass	RB			35 bar 508 psig	35					Contact gauges LP (50 mm)	CGL 50	Pressure sensor HP+LP	HLP			O_2	O2
					50 bar 725 psig	50					Contact gauges LP+HP (50 mm)	CGHL 50	None	0			CO_2	CO2
																	N_2O	N20
																	He	He
																	H_2	H2

*Other gases on demand

ALL RIGHTS OF CHANGE RESERVED

SERIES CC 285 / 385 | AUTOMATIC SWITCHOVER BOARD WITH MANUAL RESET

WITH INTEGRATED OUTLET PRESSURE REGULATOR

- Cartridge single stage regulators
- Diaphragm valves
- Dual stage regulator integrated

★ 2x2 inlets/1 outlet
★ 2 relief valves
★ 2 purge outlets (optional)
★ Semi-automatic
★ Regulation done by 3 cartridge regulators
★ O_2 application compatible

Special requirements on request

Optional connection with Alarm Box

INNOVATION

Compact outlet pressure regulator with integrated pressure gauge
- Purity up to 6.0
- Inlet pressure: 230 bar (3335 psig) or 300 bar (4350 psig)
- Switching pressure: 10 bar (145 psig) 16 bar (232 psig) or 35 bar (508 psig)
- Outlet pressure: 1.5 bar (22 psig) 5.5 bar (80 psig) or 10 bar (145 psig)

APPLICATIONS

- Ideally suited to insure gas supply from many high pressure sources of high purity non-corrosive gases with low flow (10 Nm^3/h)
- Dedicated to the supply of gas to analyzers and to the creation of controlled atmosphere in laboratories, control units, and for petrochemical applications
- Thanks to the flexible and modular configuration of the switchover board: Possibility to manage inlet source, purging device, outlet regulation and shut-off functions according to user's needs

KEY FEATURES

- The semi-automatic switchover board insures a continuous gas supply without gas interruption
- Ready to install thanks to pre-mounted components on a panel
- Relief valve and purge outlet can be collected
- Easy handling thanks to visible technical drawings with key functionalities marked on the back plate
- Can be equipped with or without:
  - Outlet shut-off valve
  - Purging valves
- Using contact gauges or pressure sensor, the switchover board can also be connected to an alarm box to indicate the source status
- To connect up to 6 cylinders on each side you can use Rotarex extensions

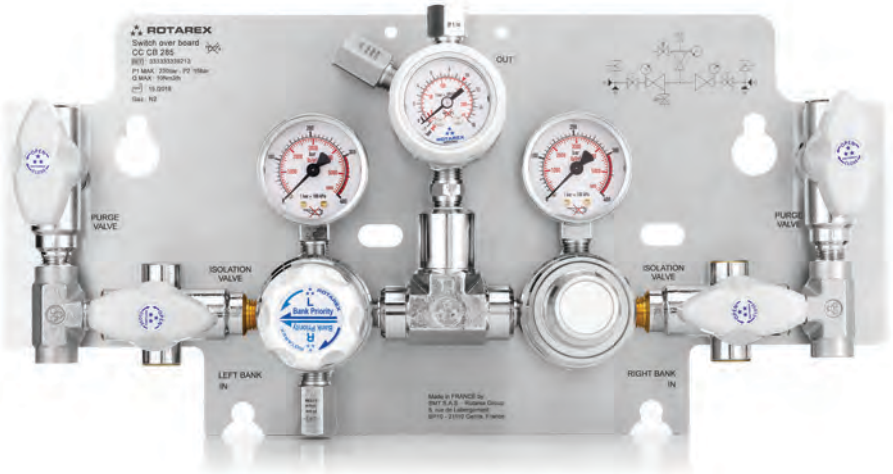

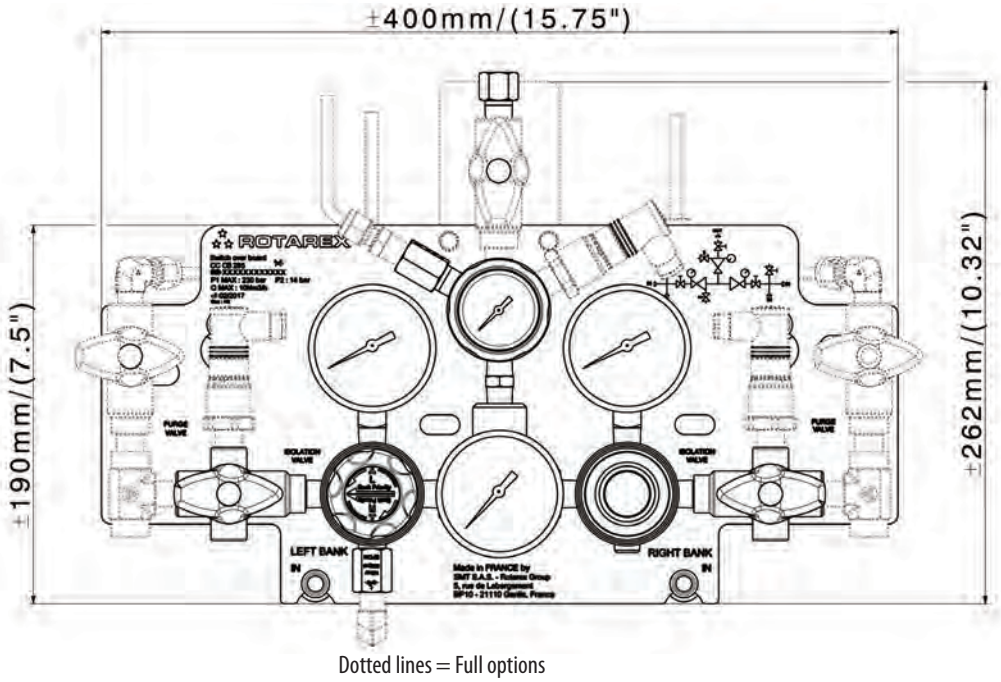

Dotted lines = Full options

ALL RIGHTS OF CHANGE RESERVED

SPECIFICATIONS

Inlet / outlet ports	¼ NPT Other connections available on request
O-ring	EPDM - standard FPM
Diaphragm	Hastelloy®

Leak rate	10^{-8} mbar ℓ/s He
Temperature range	-20°C to + 60°C -4°F to + 140°F
Nominal Flow	10 Nm^3/h (N_2) depending on outlet pressure
Gauges	¼ NPT

Inlet pressure	230 / 300 bar 3335 / 4350 psig
Outlet pressure	1.5 / 5.5 / 10 bar 22 / 80 / 145 psig
Oxygen use	Only with brass and inlet pressure 230 bar

PRODUCT CONFIGURATOR

	Body Material		Inlet Pressure		Outlet Pressure		Outlet Valve		Purge		Measurement		Sensors		Configurations		Gas*	
CC	CB / SS		285		1.5		0		P		M63		0		S		N_2	
	Chrome plated brass	**CB**	230 bar 3335 psig	**285**	1,5 bar 22 psig	**1.5**	Outlet valve ¼ NPT	**V**	With purge valves	**P**	Pressure gauge (63 mm)	**M63**	Pressure sensor HP	**HP**	Standard	**S**	N_2	**N2**
	Stainless steel	**SS**	300 bar 4350 psig	**385**	5,5 bar 80 psig	**5.5**	None	**0**	Without purge valves	**0**	Contact gauges HP (50 mm)	**CGH 50**	Pressure sensor LP	**LP**	Collected safety relief valve and purge	**CL**	Ar	**Ar**
	Raw brass	**RB**			10 bar 145 psig	**10**					Contact gauges LP (50 mm)	**CGL 50**	Pressure sensor HP+LP	**HLP**			O_2	**O2**
											Contact gauges LP+HP (50 mm)	**CGHL 50**	None	**0**			CO_2	**CO2**
																	N_2O	**N20**
																	He	**He**
																	H_2	**H2**

*Other gases on demand

ALL RIGHTS OF CHANGE RESERVED

SERIES CEN | SWITCHOVER BOARD

- Diaphragm single stage
- Balanced-Valve Technology
- Purity up to 5.5 (6.0 without the ball valve)
- Inlet pressure: 200 bar (2900 psig) or 300 bar (4350 psig)
- Outlet pressure: 10/16/30/50 bar 145/232/435/725 psig
- Acetylene version: P1 = 25 bar (362.5 psig) P2 = 1 bar (14.5 psig)
- Propane version: P1 = 25 bar (362.5 psig) P2 = 4 bar (58 psig)

★ 2 duoblocs
★ 2 x 3 inlets/1 outlet
★ Inlet/outlet pressure gauges
★ 1 relief valve
★ 2 purge outlets
★ O_2 application compatible

Special requirements on request

APPLICATIONS

- Suitable for the high flow supply of non-corrosive industrial gases when high flow are required like for plasma TIG and MIG cutting and welding applications.

KEY FEATURES

- Possible to connect 4 gas cylinders without any extension and a gas for purging operation (up to 6 cylinders without any extension - without using the purge line).
- No risk that a source flows into the other one.
- Exists also in an AUTOMATIC version (with 10 and 16 bar outlet pressure). This automatic switchover board does not need to be reset to allow reversal of the cycle.
- Ready to install with all components pre-mounted on a board.
- Best-of-class pressure stability with Balanced-Valve Technology: the effect of inlet pressure fluctuations on outlet pressure are minimized. Balanced-Valve Technology enables the delivery of a very stable outlet pressure and flow.
- Reduced seat effort increases life of the regulator and reduces the ownership cost.
- Non-whipping filter on bottom inlet improves safety of the operator during the cylinder replacement.
- Can be equipped with an outlet ¼ turn shut-off valve (Multi-turn valve with 30 bar or 50 bar version for oxygen use).
- Can also be equipped with a collection tube on the relief valve and purge outlet.
- Using contact gauges, the switchover board can also be equipped with an alarm box to indicate the source status.
- Special carbon dioxide CO_2 version available (inlet pressure 200 bar or 300 bar with maximal flow = 80m³/h)
- Special FDA compatible version available on demand
- Acetylene version available: P1 = 25 bar/P2 = 1 bar/Q = 6,5 Nm³/h
- Used with acetylene, this product must be installed with a flash back arrestor complying with the standard EN 730 located downstream.
- Propane version also available: P1 = 25 bar/P2 = 4 bar/Q = 10 Nm³/h

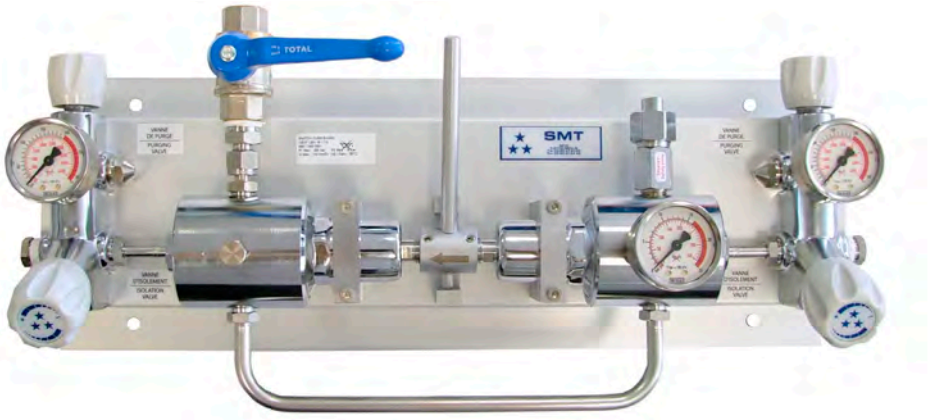

Automatic switch with manual reset
Chrome plated version

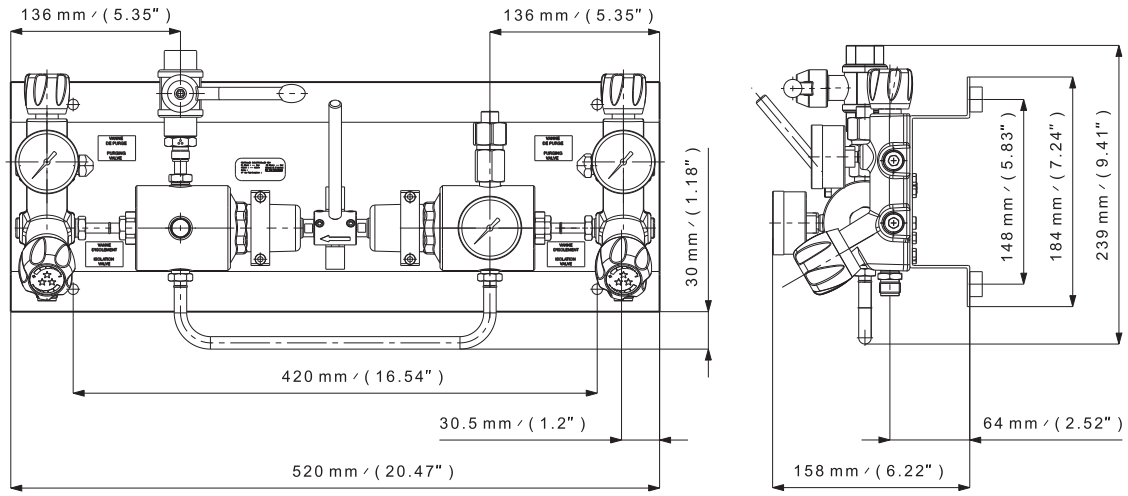

ALL RIGHTS OF CHANGE RESERVED

SPECIFICATIONS

Female ports	G ⅜ (inlet) - G ½ (outlet) or ⅜ NPT (inlet) - G ½ (outlet)
Seat seal	PCTFE
O-ring	EPDM - standard FPM
Diaphragm	AISI 304 or Hastelloy®
Weight	± 13,8 kg ± 27.0 lbs

Leak rate	w/outlet valve: 1.10^{-4} mbar ℓ/s He w/o outlet valve: 1.10^{-8} mbar ℓ/s He
Temperature range	-20°C to + 60°C -4°F to + 140°F
Gauges	High and low pressure (M10 x 1 or G 1/4)

Inlet pressure	200 bar / 300 bar 2900 psig / 4350 psig AD and PR4: 25 bar / 362.5 psig
Outlet pressure	10/16/30/50 bar 145/232/435/725 psig AD: 1 bar (14,5 psig) PR4: 4 bar (58 psig)
Nominal Flow 200 bar version	70/110/150/180 Nm^3/h (N_2)
Nominal Flow 300 bar version	50/70/100/130 Nm^3/h (N_2)
Nominal Flow AD and PR4	AD: 6,5 Nm^3/h PR4: 10 Nm^3/h
Oxygen use	OK with inlet pressure 200 and 300 bar

FLOW CURVES

FLOW CURVE CEN-16 REGULATOR

SET: 16 bar / 232 psig
8 bar / 116 psig
4 bar / 58 psig

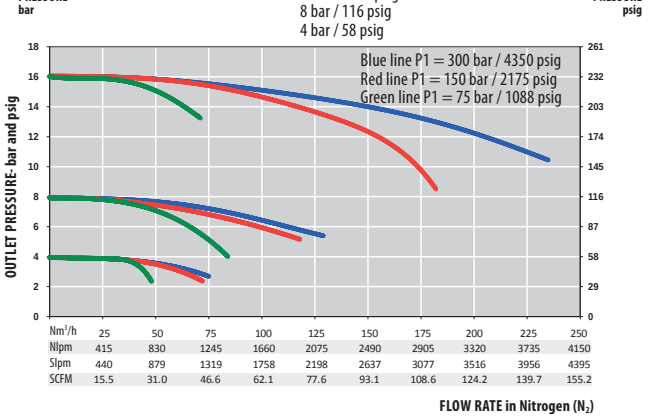

FLOW CURVE CEN-50 REGULATOR

SET: 50 Bar / 725 psig
25 Bar / 362.5 psig
12,5 Bar / 181.25 psig

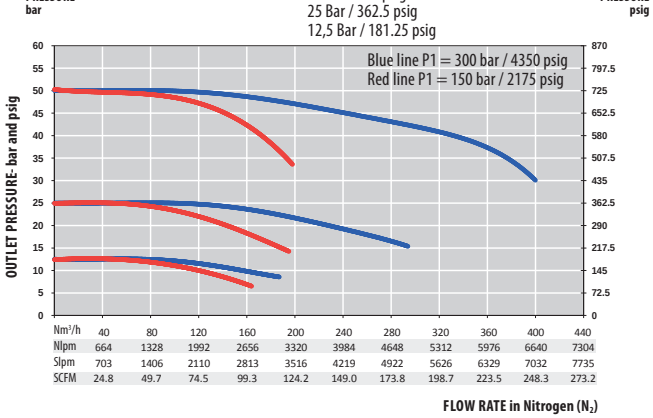

PRODUCT CONFIGURATOR

	Inlet Pressure	Version type	Outlet Pressure	Body Material	End Connections	O-ring Material	Gauges	Outlet Valve	Configurations
CEN	300	SEMI	16	L	G	EPDM	1	V	A
	200 bar 2900 psig **200**	Automatic switch with manual reset **SEMI**	10 bar 145 psig **10**	Raw Brass **LB**	In: G ⅜ Out: G ½ - Female **G**	EPDM - standard	with gauges - standard **1**	with outlet shut-off valve **V**	Standard configuration **A**
	300 bar 4350 psig **300**		16 bar 232 psig **16**	Chrome Plated Brass **L**	In: ⅜ NPT Out: G ½ - Female **N**	FPM	with HP inductive contact gauge **2**		
			30 bar 435 psig **30**						
			30 OX bar (435 psig) oxygen use **30 OX**						
			50 bar 725 psig **50**						
			50 OX bar (725 psig) oxygen use **50 OX**						
			Acetylene special version (P2 = 1 bar) **AD**						
			Propane special version (P2 = 4 bar) **PR4**						

ALL RIGHTS OF CHANGE RESERVED

SERIES TD 102 | SWITCHOVER BOARD

- Diaphragm single stage
- Purity up to 6.0
- Inlet pressure:
  200 bar (2900 psig)
- Outlet pressure:
  10/25/50 bar
  145/363/725 psig
- NH_3 version:
  P1 = 8 bar (116 psig)
  P2 = 3 bar (43.5 psig)

★ 2 duoblocs
★ 2 x 3 inlets/1 outlet
★ 2 inlets/1 outlet pressure gauges
★ 1 relief valve
★ 2 purge outlets
★ Regulation done by 2 x S 220 regulators
★ Only in stainless steel

Special requirements on request

APPLICATIONS

- Ideally suited for corrosive gases and high purity applications for low flow applications.
- Dedicated to the supply of gas to analyzers and to the creation of controlled atmosphere in laboratories, control units.

KEY FEATURES

- Possible to manage 4 gas cylinders without any extension and a gas for purging operation (up to 6 cylinders without any extension - without using the purge line).
- No risk that a source flows into the other one.
- Ready to install with all components are mounted on a board.
- Can be equipped with a collectable tube on the relief valve and purge outlet.
- Can also be equipped with an outlet shut-off valve.
- Using contact gauges, the switchover board can also be equipped with an alarm box to indicate the source status.
- NH_3 version available:
  P1 = 8 bar/P2 = 3 bar/Q = 5 Nm^3/h.

Automatic switch with manual reset

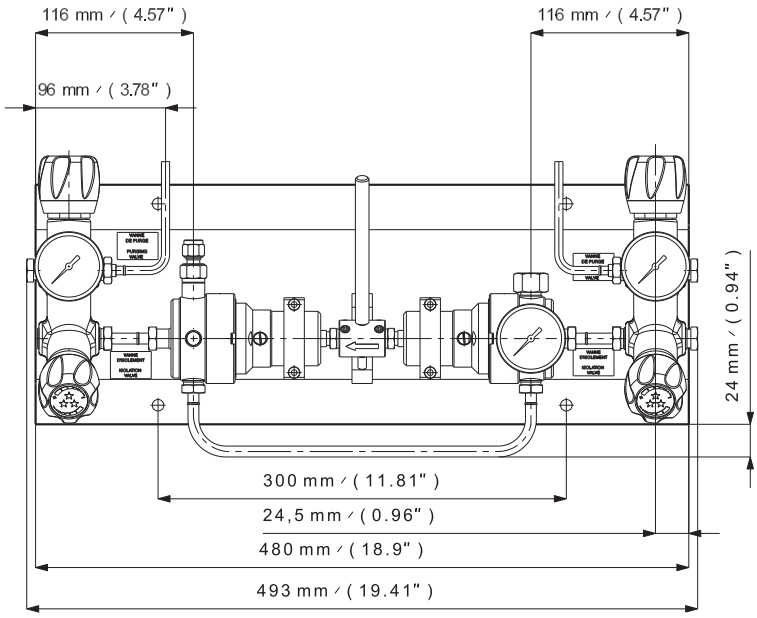

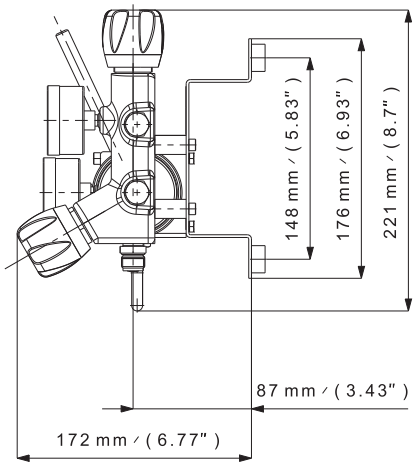

ALL RIGHTS OF CHANGE RESERVED

SPECIFICATIONS

Female ports	G ⅜ (inlet/outlet) or ¼ NPT (inlet/outlet)	**Weight**	± 15,0 kg ± 33.0 lbs	**Inlet pressure**	200 bar (2900 psig) NH_3: 8 bar (116 psig)
Seat seal	PCTFE	**Leak rate**	10^{-8} mbar ℓ/s He	**Outlet pressure**	10/25/50 bar 145/363/725 psig NH_3: 3 bar (43.5 psig)
O-ring	EPDM - standard FPM	**Temperature range**	-20°C to + 60°C -4°F to + 140°F	**Nominal Flow**	10/10/50 Nm^3/h (N_2) NH_3: 5 Nm^3/h (NH_3)
Diaphragm	Hastelloy®	**Gauges**	High and low pressure (M10 x 1 or ⅛ NPT)	**Oxygen use**	No

FLOW CURVES

FLOW CURVE TD 100-25 REGULATOR

SET: 25 bar / 362.5 psig
15 bar / 217.5 psig
10 bar / 145 psig

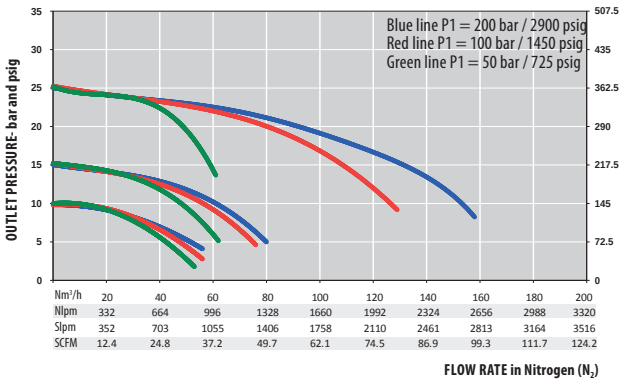

FLOW CURVE TD 100-50 REGULATOR

SET: 50 bar / 725 psig
25 bar / 362.5 psig
12,5 bar / 181.25 psig

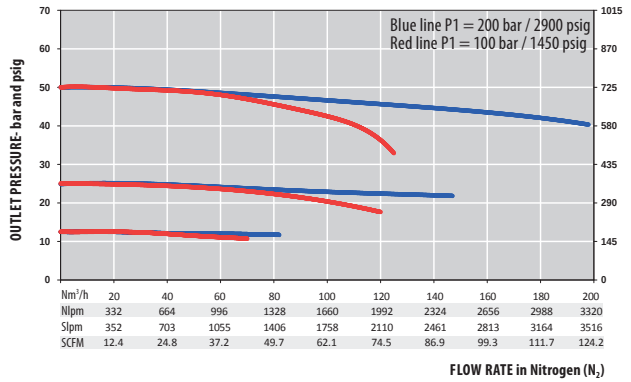

PRODUCT CONFIGURATOR

Body Material	Version Type	Outlet Pressure	End Connections	O-ring Material	Gauges	Outlet Valve	Configuration
TDI	102	10	G	EPDM	1	V	A
Stainless steel **TDI**	Automatic switch with manual reset **102**	10 bar 145 psig **10**	G ⅜ - Female **G**	EPDM - standard	with gauges - standard **1**	without outlet shut-off valve (standard) **NV**	Standard configuration **A**
		25 bar 362.5 psig **25**	¼ NPT - Female **N**	FPM	with HP inductive contact gauge **2**	with outlet shut-off valve **V**	with connected purge and relief valve **CL**
		50 bar 725 psig **50**					
		Ammonia special version (P2 = 3 bar) **NH3**					

ALL RIGHTS OF CHANGE RESERVED

SERIES TD 202 | SWITCHOVER BOARD

- Diaphragm single stage
- Purity up to 6.0
- Inlet pressure:
  200 bar (2900 psig)
  or 300 bar (4350 psig)
- Outlet pressure:
  10 bar (145 psig)
  or 16 bar (232 psig)

★ 2 duoblocs
★ 2 x 3 inlets/1 outlet
★ 2 inlets/1 outlet pressure gauges
★ 1 relief valve
★ 2 purge outlets
★ Regulation done by 2 x S 215
★ O_2 application compatible (brass only 200 bar version)

Special requirements on request

APPLICATIONS

- Ideally suited to insure gas supply from many high-pressure sources of high purity non-corrosive gases with low flow
- Dedicated to the supply of gas to analyzers and to the creation of controlled atmosphere in laboratories, control units, and for petrochemical applications.

KEY FEATURES

- Possible to manage 4 gas cylinders without any extension and a gas for purging operation (up to 6 cylinders without any extension - without using the purge line).
- No risk that a source flows into the other one.
- The automatic switchover board does not need to be reset to allow reversal of the cycle.
- Ready to install due with all components pre-mounted on a board.
- Can be equipped with a collection tube on the relief valve and purge outlet.
- Can be equipped with an outlet shut-off valve.
- Using contact gauges, the switchover board can also be equipped with an alarm box to indicate the source status.

3 inlet ports

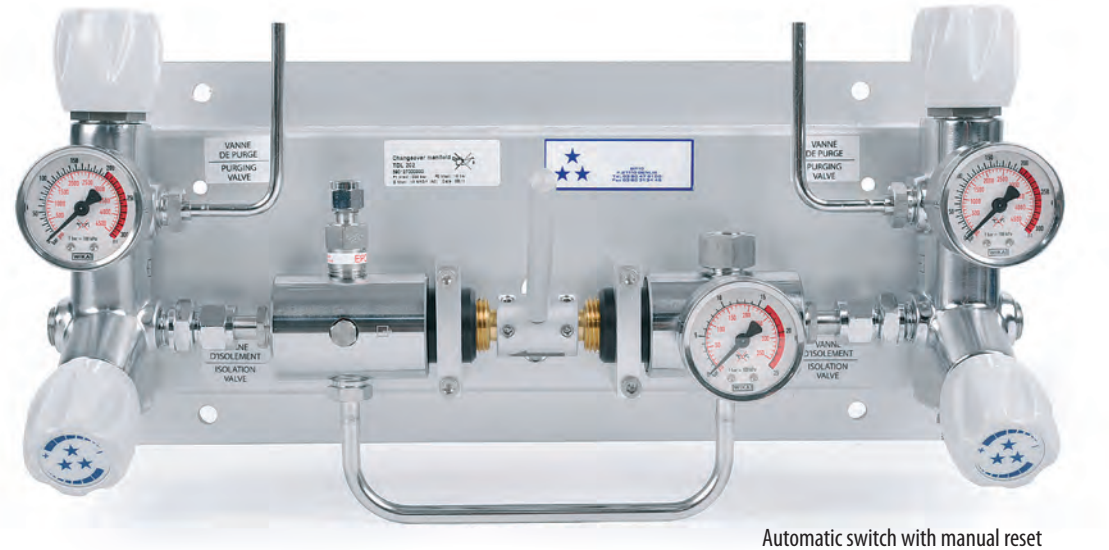

Automatic switch with manual reset

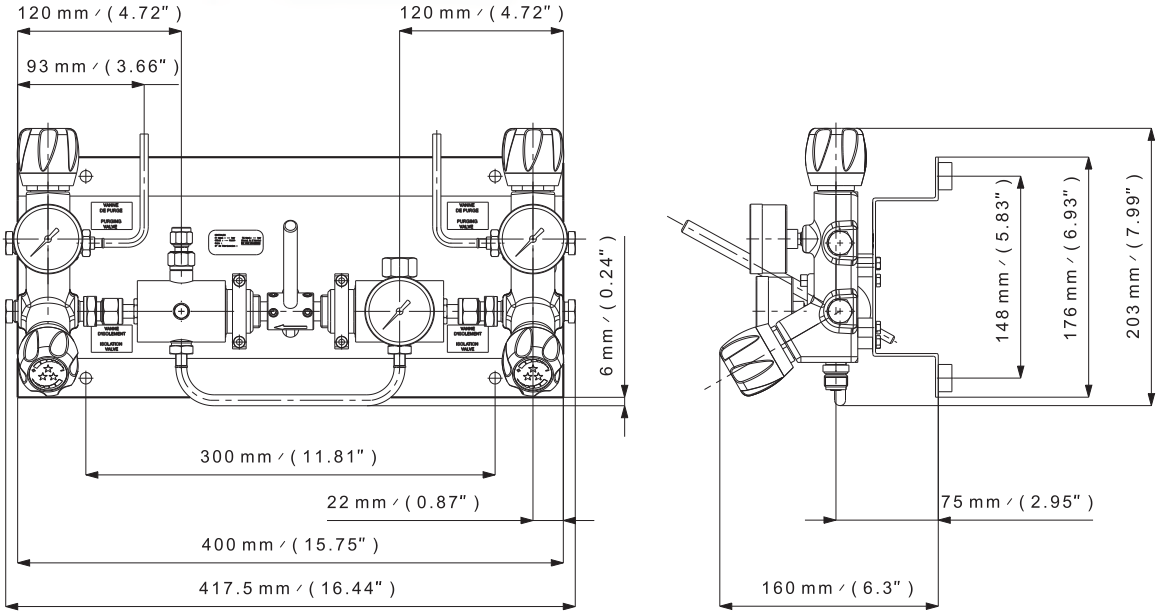

ALL RIGHTS OF CHANGE RESERVED

SPECIFICATIONS

Female ports	G ⅜ (inlet/outlet) or ¼ NPT (inlet/outlet)	**Weight**	± 13 kg ± 29.0 lbs	**Inlet pressure**	200 bar / 300* bar 2900 psig / 4350 psig
Seat seal	PCTFE	**Leak rate**	10^{-8} mbar ℓ/s He	**Outlet pressure**	10/16 bar 145/232 psig
O-ring	EPDM - standard FPM	**Temperature range**	-20°C to + 60°C -4°F to + 140°F	**Nominal Flow**	10/10 Nm³/h (N_2)
Diaphragm	AISI 304 Hastelloy®	**Gauges**	High and low pressure (M10 x 1 or ⅛ NPT)	**Oxygen use**	Brass only with inlet pressure 200 bar

*Only in chrome plated version

FLOW CURVES

FLOW CURVE TD 200-10 REGULATOR

SET: 10 bar / 145 psig
5 bar / 72.5 psig
2,5 bar / 36,25 psig

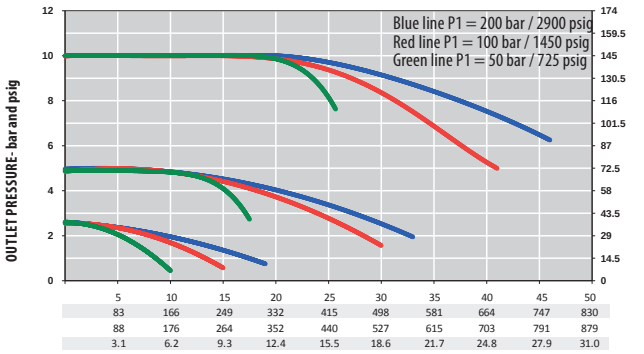

FLOW CURVE TD 200-16 REGULATOR

SET: 16 bar / 232 psig
8 bar / 116 psig
4 bar / 58 psig

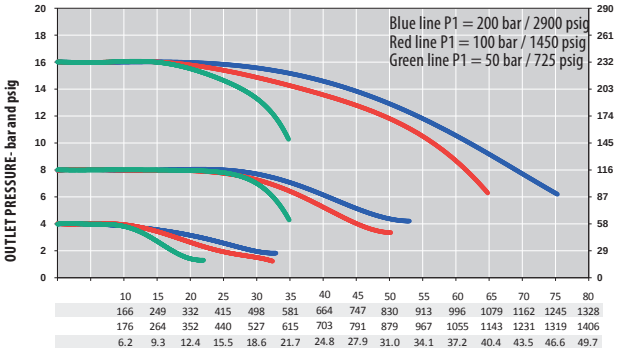

PRODUCT CONFIGURATOR

	Body Material		Inlet Pressure and Version Type		Outlet Pressure		End Connections		O-ring Material	Gauges		Outlet Valve		Configuration	
TD	L		202		10		G		EPDM	1		NV		A	
	Chrome Plated Brass	L	Automatic switch with manual reset	202	10 bar 145 psig	10	G ⅜ - Female	G	EPDM - standard	with gauges - standard	1	without outlet shut-off valve (standard)	NV	Standard configuration	A
	Stainless steel	I	300 bar (4350 psig) Automatic switch with manual reset	302	16 bar 232 psig	16	¼ NPT - Female	N	FPM	with HP inductive contact gauges	2	with outlet shut-off valve	V	with connected purge and relief valve	CL

ALL RIGHTS OF CHANGE RESERVED

SERIES TD 502 | SWITCHOVER BOARD

- Diaphragm single stage
- Balanced-Valve Technology
- Purity up to 6.0
- Inlet pressure:
  200 bar (2900 psig)
- Outlet pressure:
  10/25/50 bar
  145/363/725 psig

★ 2 duoblocs
★ 2 x 3 inlets/1 outlet
★ Inlet/outlet pressure gauges
★ 1 relief valve
★ 2 purge outlets
★ O_2 application compatible
(brass only 200 bar version)

Special requirements on request

APPLICATIONS

- Ideally suited to insure gas supply from many high-pressure sources of high purity non-corrosive gases with high flow
- Dedicated to supply of gas to analyzers and to create a controlled atmosphere in laboratories, control units, and for petrochemical applications.

KEY FEATURES

- Possible to manage 4 gas cylinders without any extension and a gas for purging operation (up to 6 cylinders without any extension - without using the purge line).
- No risk that a source flows into the other one.
- Ready to install with all components pre-mounted on a board.
- The automatic switchover board does not need to be reset to allow reversal of the cycle.
- Best-in-class pressure stability with Balanced-Valve Technology: the effect of inlet pressure fluctuations on outlet pressure are minimized. The Balanced-Valve Technology enables the delivery of a very stable outlet pressure and flow.
- The BV Technology reduces the efforts on the seat to increase life of the regulator and reduce the ownership cost.
- Can be equipped with a collection tube on the relief valve and purge outlet.
- Can be equipped with an outlet shut-off valve.
- Using contact gauges, the switchover board can also be equipped with an alarm box to indicate the source status.

Automatic switch with manual reset

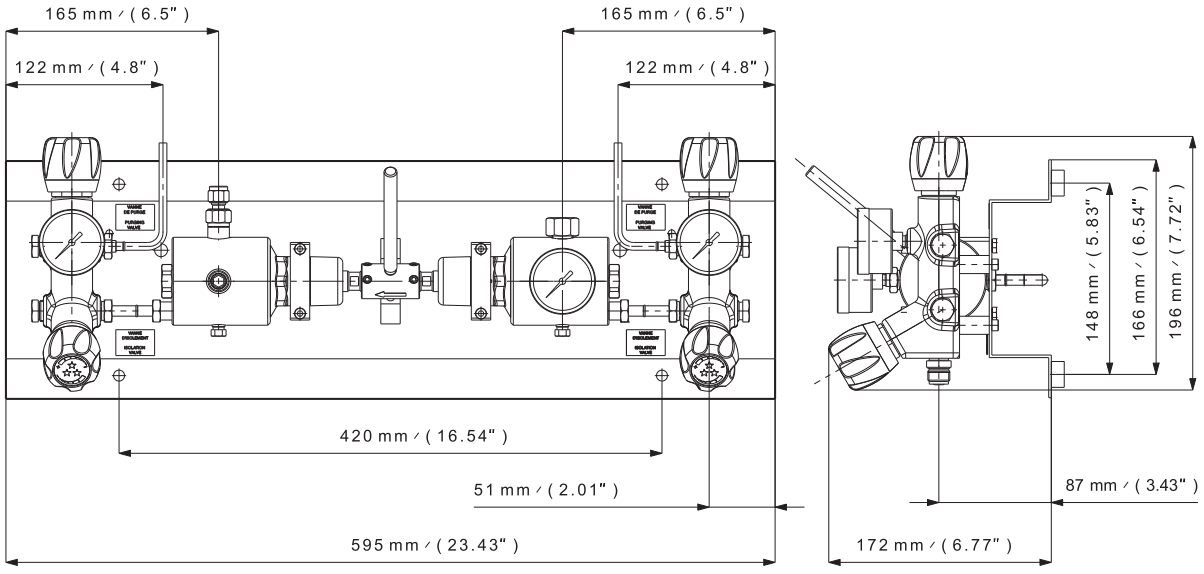

ALL RIGHTS OF CHANGE RESERVED

SPECIFICATIONS

Female ports	G ⅜ (inlet/outlet) or ¼ NPT (inlet/outlet)	**Weight**	± 13 kg ± 29.0 lbs	**Inlet pressure**	200 bar 2900 psig
Seat seal	PCTFE	**Leak rate**	10^{-8} mbar ℓ/s He	**Outlet pressure**	10/25/50 bar 145/363/725 psig
O-ring	EPDM - standard FPM	**Temperature range**	-20°C to + 60°C -4°F to + 140°F	**Nominal Flow**	50/50/100 Nm^3/h (N_2)
Diaphragm	AISI 304 Hastelloy®	**Gauges**	High and low pressure (M10 x 1 or ⅛ NPT)	**Oxygen use**	Brass only with inlet pressure 200 bar

FLOW CURVES

FLOW CURVE TD 500-10 REGULATOR
SET: 10 bar / 145 psig
5 bar / 72.5 psig
2,5 bar / 36.35 psig

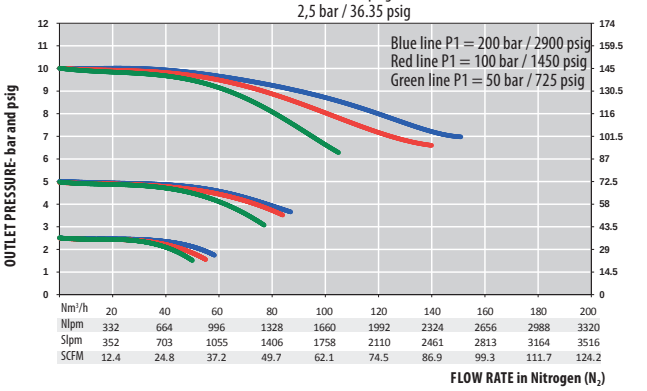

Nm^3/h	20	40	60	80	100	120	140	160	180	200		
Nlpm	332	664	996	1328	1660	1992	2324	2656	2988	3320		
Slpm	352	703	1055	1406	1758	2110	2461	2813	3164	3516		
SCFM	12.4	24.8	37.2	49.7	62.1	74.5	86.9	99.3	111.7	124.2		

FLOW RATE in Nitrogen (N_2)

FLOW CURVE TD 500-25 REGULATOR
SET: 25 bar / 362.5 psig
12,5 bar / 181.25 psig
6.25 bar / 90.62 psig

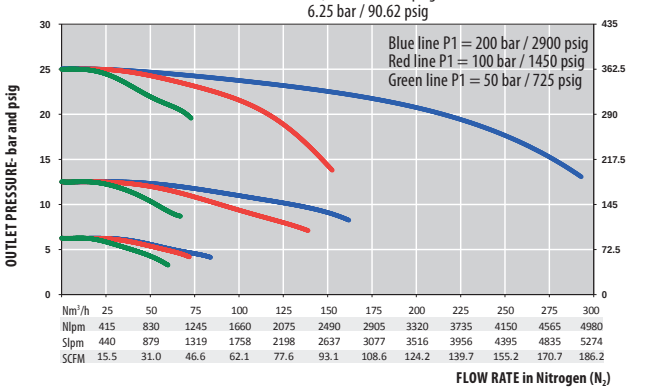

Nm^3/h	25	50	75	100	125	150	175	200	225	250	275	300
Nlpm	415	830	1245	1660	2075	2490	2905	3320	3735	4150	4565	4980
Slpm	440	879	1319	1758	2198	2637	3077	3516	3956	4395	4835	5274
SCFM	15.5	31.0	46.6	62.1	77.6	93.1	108.6	124.2	139.7	155.2	170.7	186.2

FLOW RATE in Nitrogen (N_2)

FLOW CURVE TD 500-50 REGULATOR
SET: 50 Bar / 725 psig
25 Bar / 362.5 psig
12,5 Bar / 181.25 psig

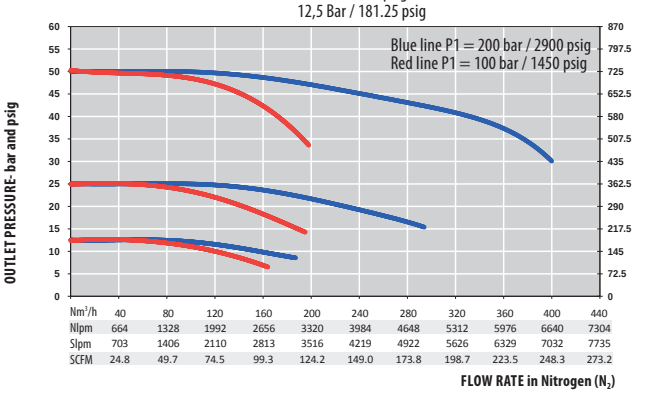

Nm^3/h	40	80	120	160	200	240	280	320	360	400	440
Nlpm	664	1328	1992	2656	3320	3984	4648	5312	5976	6640	7304
Slpm	703	1406	2110	2813	3516	4219	4922	5626	6329	7032	7735
SCFM	24.8	49.7	74.5	99.3	124.2	149.0	173.8	198.7	223.5	248.3	273.2

FLOW RATE in Nitrogen (N_2)

PRODUCT CONFIGURATOR

	Body Material		Inlet Pressure and Version Type		Outlet Pressure		End Connections		O-ring Material	Gauges		Outlet Valve		Configuration	
TD	L		502		10		G		EPDM	1		NV		A	
	Chrome Plated Brass	L	200 bar (2900 psig) Automatic switch with manual reset	502	10 bar 145 psig	10	G ⅜ - Female	G	EPDM - standard	with gauges - standard	1	without outlet shut-off valve (standard)	NV	Standard configuration	A
	Stainless steel	I			25 bar 362.5 psig	25	¼ NPT - Female	N	FPM	with HP inductive contact gauges	2	with outlet shut-off valve	V	with connected purge and relief valve	CL
					50 bar 725 psig	50									

ALL RIGHTS OF CHANGE RESERVED

SERIES MOD | SUPPLY BOARD

- Diaphragm single stage
- Balanced-Valve Technology
- Purity up to 5.5 (6.0 without the ball valve)
- Inlet pressure: 200 bar (2900 psig) or 300 bar (4350 psig)
- Outlet pressure: 10/16/30/50 bar 145/232/435/725 psig

★ 1 duobloc
★ 3 inlets/1 outlet
★ Inlet/outlet pressure gauges
★ 1 relief valve
★ 1 purge outlet
★ O_2 application compatible (see technical data)
★ Acetylene version available
★ Propane version available

Special requirements on request

APPLICATIONS

- Used in combination with a switchover board for the regulation of the emergency source during maintenance on the principal source. This avoids installing extensions and reduces the amount of leaking points.
- Suitable for the high flow supply of industrial gases except toxic and corrosive gases.

KEY FEATURES

- Possible to connect 2 gas cylinders and a gas for purging operation (up to 3 cylinders without any extension - without using the purge line).
- Ready to install: all components are pre-mounted on a board.
- Best-of-class pressure stability with Balanced-Valve Technology: the effect of inlet pressure fluctuations on outlet pressure are minimized. Balanced-Valve Technology enables the delivery of a very stable outlet pressure and flow even with high flow line regulators.
- Non-whipping filter improves safety of the operator during the cylinder replacement.
- Can be equipped with an outlet ¼ turn shut-off valve (Multi-turn valve with 30 bar or 50 bar version for oxygen use).
- Can be connected to an alarm box using contact gauges.
- Acetylene version available: P1 = 25 bar / P2 = 1 bar/Q = 6,5 Nm^3/h.
- For use with acetylene this product must be installed with a flash back arrestor complying with the standard EN 730 located downstream.
- Propane version available: P1 = 25 bar/P2 = 4 bar/Q = 10 Nm^3/h.

3 inlet ports

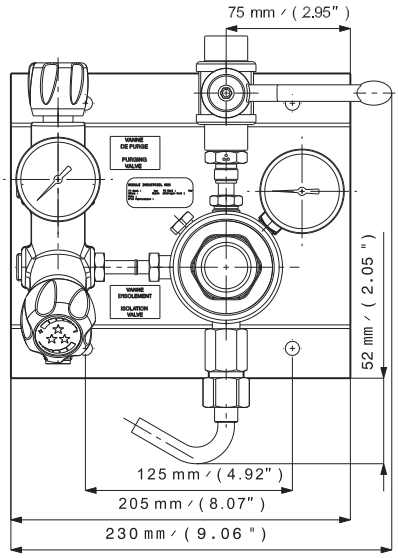

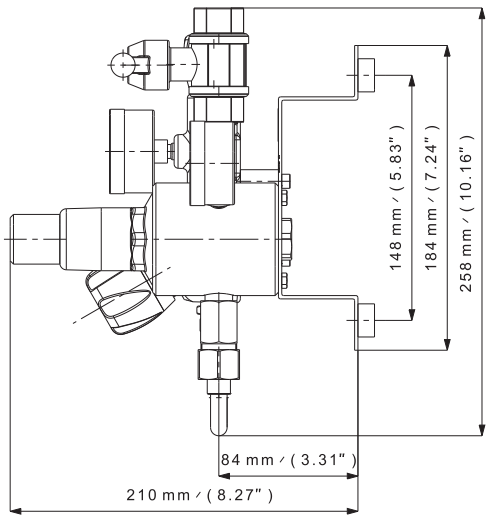

ALL RIGHTS OF CHANGE RESERVED

SPECIFICATIONS

Female ports	In: G ⅜ - Out: G ½ In: ⅜ NPT - Out: G ½
Seat seal	PCTFE
O-ring	EPDM - Standard FPM
Diaphragm (regulator)	AISI 304 or Hastelloy®
Weight	± 6,0 kg ± 13.0 lbs

Leak rate	w/outlet valve: 1.10^{-4} mbar ℓ/s He w/o outlet valve: 1.10^{-8} mbar ℓ/s He
Temperature range	-20°C to + 60°C -4°F to + 140°F
Gauges	High and low pressure (M10 x 1 or G ¼)

Inlet pressure	200 bar / 300 bar 2900 psig / 4350 psig AD and PR4: 25 bar (362.5 psig)
Outlet pressure	10/16/30/50 bar 145/232/435/725 psig AD: 1 bar (14.5 psig) PR4: 4 bar (58 psig)
Nominal Flow 200 bar version	70/110/150/180 Nm^3/h (N_2)
Nominal Flow 300 bar version	50/70/100/130 Nm^3/h (N_2)
Nominal Flow AD and PR4	AD: 6,5 Nm^3/h PR4: 10 Nm^3/h
Oxygen use	OK with inlet pressure 200 and 300 bar

FLOW CURVES

FLOW CURVE MOD-10 REGULATOR

SET: 10 bar / 145 psig
5 bar / 72.5 psig
2,5 bar / 36.35 psig

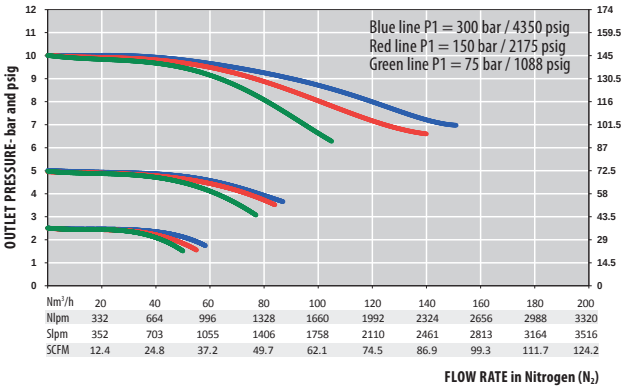

FLOW CURVE MOD-16 REGULATOR

SET: 16 bar / 232 psig
8 bar / 116 psig
4 bar / 58 psig

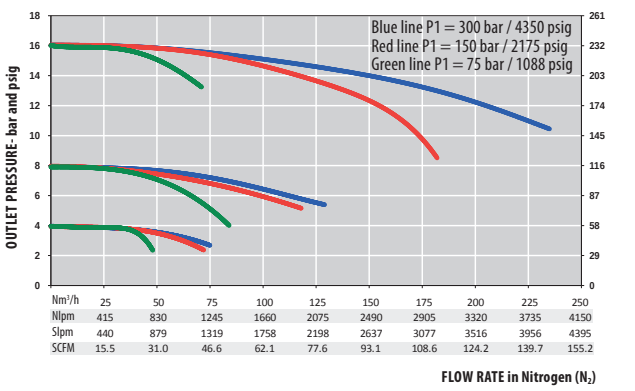

PRODUCT CONFIGURATOR

Inlet pressure		Outlet		Body Material		End Connections		O-ring Material	Gauges		Fix or adjustable Outlet Pressure		Oulet valve		Configuration	
MOD300		16		L		G		EPDM	1		FX		V		A	
200 bar 2900 psig	200	10 bar 145 psig	10	Raw brass	LB	In: G ⅜ Out: G ½ Female	G	EPDM - Standard	With gauges - standard	1	With fixed P2 (standard)	FX	With outlet shut-off valve	V	Standard configuration	A
300 bar 4350 psig	300	16 bar 232 psig	16	Chrome plated brass	L	In: ⅜ NPT Out: G ½ Female	N	FPM			With adjustable P2 (handwheel)	ADJ				
		30 bar 435 psig	30													
		30 bar 435 psig oxygen use	30 OX													
		50 bar 725 psig	50													
		50 bar 725 psig oxygen use	50 OX													
		Acetylene special version (P2 = 1 bar)	AD													
		Propane special version (P2 = 4 bar)	PR4													

ALL RIGHTS OF CHANGE RESERVED

SERIES CEN | SWITCHOVER BOARD

- Diaphragm single stage
- Balanced-Valve Technology
- Purity up to 5.5 (6.0 without the ball valve)
- Inlet pressure: 200 bar (2900 psig) or 300 bar (4350 psig)
- Outlet pressure: 10/16/30/50 bar 145/232/435/725 psig
- Acetylene version: P1 = 25 bar (362.5 psig) P2 = 1 bar (14.5 psig)
- Propane version: P1 = 25 bar (362.5 psig) P2 = 4 bar (58 psig)

★ 2 duoblocs
★ 2 x 3 inlets/1 outlet
★ Inlet/outlet pressure gauges
★ 1 relief valve
★ 2 purge outlets
★ O_2 application compatible

Special requirements on request

APPLICATIONS

- Suitable for the high flow supply of non-corrosive industrial gases when high flow are required like for plasma TIG and MIG cutting and welding applications.

KEY FEATURES

- Possible to connect 4 gas cylinders without any extension and a gas for purging operation (up to 6 cylinders without any extension - without using the purge line).
- No risk that a source flows into the other one.
- Exists also in an AUTOMATIC version (with 10 and 16 bar outlet pressure). This automatic switchover board does not need to be reset to allow reversal of the cycle.
- Ready to install with all components pre-mounted on a board.
- Best-of-class pressure stability with Balanced-Valve Technology: the effect of inlet pressure fluctuations on outlet pressure are minimized. Balanced-Valve Technology enables the delivery of a very stable outlet pressure and flow.
- Reduced seat effort increases life of the regulator and reduces the ownership cost.
- Non-whipping filter on bottom inlet improves safety of the operator during the cylinder replacement.
- Can be equipped with an outlet ¼ turn shut-off valve (Multi-turn valve with 30 bar or 50 bar version for oxygen use).
- Can also be equipped with a collection tube on the relief valve and purge outlet.
- Using contact gauges, the switchover board can also be equipped with an alarm box to indicate the source status.
- Special carbon dioxide CO_2 version available (inlet pressure 200 bar or 300 bar with maximal flow = 80m³/h)
- Special FDA compatible version available on demand
- Acetylene version available: P1 = 25 bar/P2 = 1 bar/Q = 6,5 Nm³/h
- Used with acetylene, this product must be installed with a flash back arrestor complying with the standard EN 730 located downstream.
- Propane version also available: P1 = 25 bar/P2 = 4 bar/Q = 10 Nm³/h

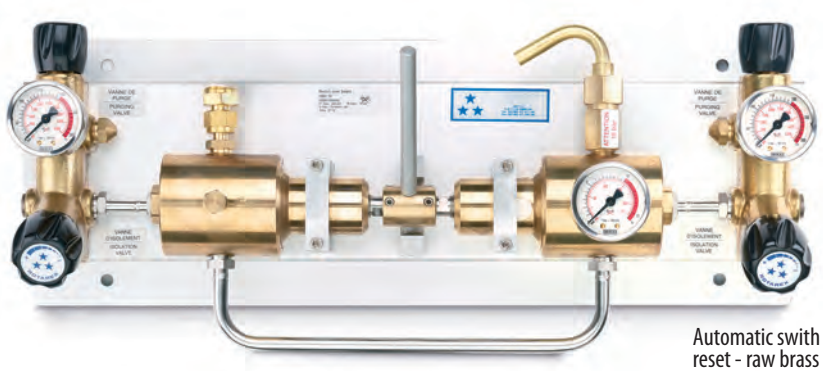

Automatic swith with manual reset - raw brass version

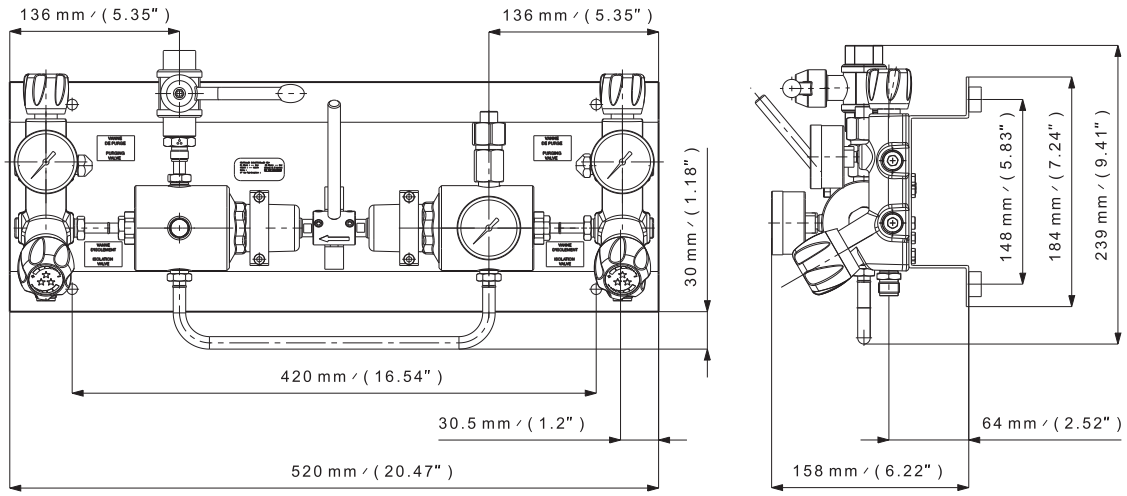

ALL RIGHTS OF CHANGE RESERVED

SPECIFICATIONS

Female ports	G ⅜ (inlet) - G ½ (outlet) or ⅜ NPT (inlet) - G ½ (outlet)
Seat seal	PCTFE
O-ring	EPDM - standard FPM
Diaphragm	AISI 304 or Hastelloy®
Weight	± 13,8 kg ± 27.0 lbs

Leak rate	w/outlet valve: 1.10^{-4} mbar ℓ/s He w/o outlet valve: 1.10^{-8} mbar ℓ/s He
Temperature range	-20°C to + 60°C -4°F to + 140°F
Gauges	High and low pressure (M10 x 1 or G 1/4)

Inlet pressure	200 bar / 300 bar 2900 psig / 4350 psig AD and PR4: 25 bar / 362.5 psig
Outlet pressure	10/16/30/50 bar 145/232/435/725 psig AD: 1 bar (14,5 psig) PR4: 4 bar (58 psig)
Nominal Flow 200 bar version	70/110/150/180 Nm^3/h (N_2)
Nominal Flow 300 bar version	50/70/100/130 Nm^3/h (N_2)
Nominal Flow AD and PR4	AD: 6,5 Nm^3/h PR4: 10 Nm^3/h
Oxygen use	OK with inlet pressure 200 and 300 bar

FLOW CURVES

FLOW CURVE CEN-16 REGULATOR

SET: 16 bar / 232 psig
8 bar / 116 psig
4 bar / 58 psig

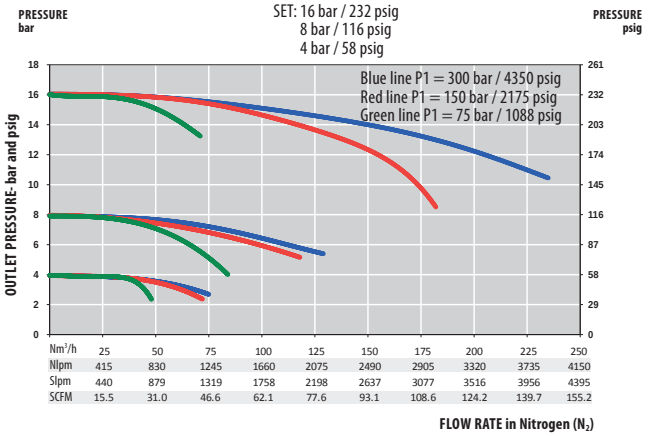

FLOW CURVE CEN-50 REGULATOR

SET: 50 Bar / 725 psig
25 Bar / 362.5 psig
12,5 Bar / 181.25 psig

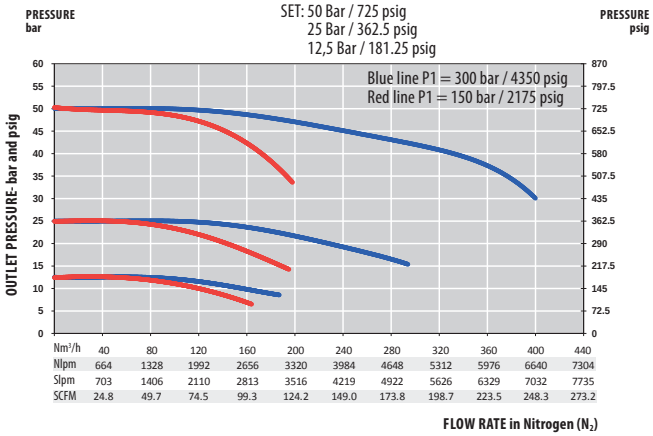

PRODUCT CONFIGURATOR

	Inlet Pressure	Version type	Outlet Pressure	Body Material	End Connections	O-ring Material	Gauges	Outlet Valve	Configurations
CEN	300	SEMI	16	L	G	EPDM	1	V	A
	200 bar 2900 psig **200**	Automatic switch with manual reset **SEMI**	10 bar 145 psig **10**	Raw Brass **LB**	In: G ⅜ Out: G ½ - Female **G**	EPDM - standard	with gauges - standard **1**	with outlet shut-off valve (standard) **V**	Standard configuration **A**
	300 bar 4350 psig **300**		16 bar 232 psig **16**	Chrome Plated Brass **L**	In: ⅜ NPT Out: G ½ - Female **N**	FPM	with HP inductive contact gauge **2**		
			30 bar 435 psig **30**						
			30 OX bar (435 psig) oxygen use **30 OX**						
			50 bar 725 psig **50**						
			50 OX bar (725 psig) oxygen use **50 OX**						
			Acetylene special version (P2 = 1 bar) **AD**						
			Propane special version (P2 = 4 bar) **PR4**						

ALL RIGHTS OF CHANGE RESERVED

BA 12 | ALARM BOX

- Signal sent automatically for notifying gas shortage. The message is visual and acoustic
- Optional EX protection (installation outside Ex-area)
- Devices available in three versions: For 2, 6 and 10 pressure gauge

ALARM BOXES

★ 2/6/10 contacts
★ Ex Version

Special requirements on request

KEY FEATURES

- Detecting a drop in pressure when the gas bottle is empty
- Messages are displayed visually by LEDs and audibly buzzer
- Remote message with potential free contacts possible
- Inputs for magnetic spring contact and inductive contact pressure gauge are suitable. Only NC contacts for safety!
- Plastic case with IP65 seal for wall and panel mounting
- Cage clamp connection and pluggable
- Easy to configure when the device is closed

OPTIONS

- Intrinsically safe barrier for Ex environment (Isolating switching amplifier)
- 230V AC or 115V AC power supply

KEY ADVANTAGES

- Product flexibility : three versions available according to your process(2, 6 or 10 contacts)
- Potential-free output as change-over contact
- Group message and New value message
- Integrated LED allow visual information
- Integrated Buzzer for acoustic alarm

BA 12-02

BA 12-06

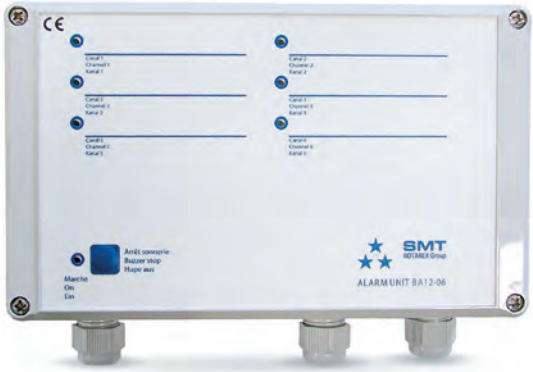

BA 12-10

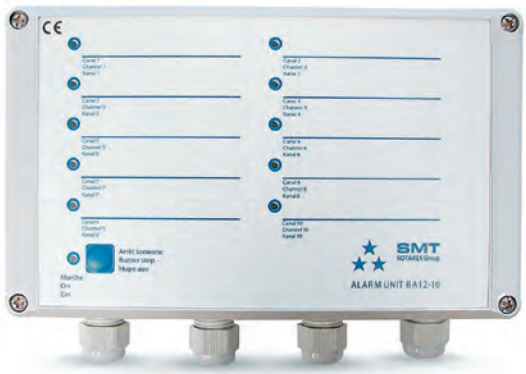

ALL RIGHTS OF CHANGE RESERVED

SPECIFICATIONS

Voltage	230 VAC/50 Hz 115 VAC/60 Hz
Power	< 3VA

Type 1	Potential free relay contact
Rating	8A/230 VAC w/ resistive load
Function	Group Message
Type 2	For external horn or lamp
Rating	8A/230 VAC w/ resistive load

Connection	2-storey cage clamps
Terminal voltage	10VDC/10mA (unstabilized) 0.9
Material	ABS
Protection	IP 65
Dimension (W x H x D)	200 x 120 x 75 (mm)
Temperature range	0° C to 55°C 32°F to 131°F

PRODUCT CONFIGURATOR

	Contacts		Voltage		Ex protection	
BA12	**02**		**230**		**0**	
	2 contacts	**02**	230 VAC	**230**	Without	**0**
	6 contacts	**06**	115 VAC	**115**	With	**EX**
	10 contacts	**10**				

Others versions and possibilities available upon request

ALL RIGHTS OF CHANGE RESERVED

CEN EXT/TD EXT | EXTENSIONS

Left or right, 2 or 3 cylinders extension for supply board (CM or MOD series) and switchover board (TD or CEN series)

EXTENSIONS

★ For supply boards and switchover boards
★ 2 or 3 cylinders version

Special requirements on request

KEY FEATURES

- High pressure header to connect cylinder batteries available for various gases
- 2 or 3 cylinder version
- Standard inlet: G ⅜ - Male
- Standard outlet: G ⅜ - Female
- With plate

OPTIONS

- Flexible hose for connection with cylinders

CEN & MOD EXTENSION

TD & CM SERIES EXTENSION

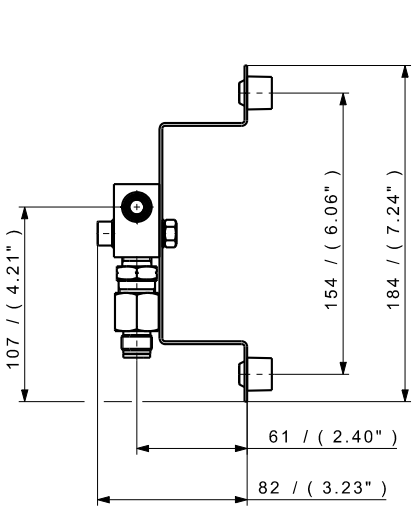

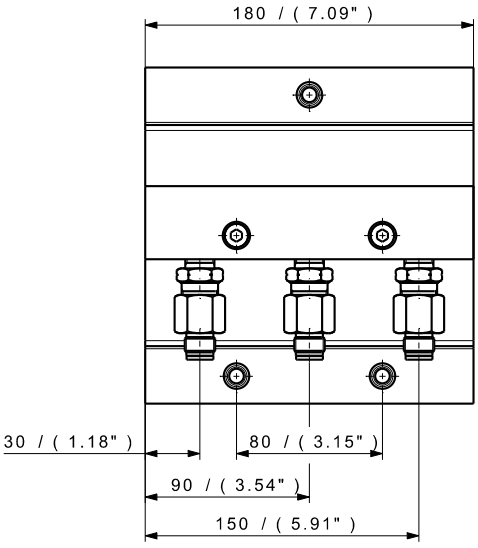

ALL RIGHTS OF CHANGE RESERVED

SPECIFICATIONS

Material	Raw brass (CEN & MOD) or Stainless steel (TD & CM)	**Temperature range**	-20°C to + 60°C -4°F to + 140°F	**Ports (outlet)**	G ⅜ - Female
Gasket	PA 6.6 (CEN & MOD versions)	**Inlet pressure max.**	300 bar 4350 psig	**Shut-off valves**	Option
O-ring	EPDM - standard FPM	**Seat orifice size**	Ø 4 mm (TDL version)	**Oxygen use**	OK
Plate	Option (CEN & MOD versions) Standard (TD & CM versions)	**Connections**	2 or 3 cylinders		
Leak rate	10^{-8} mbar ℓ/s He	**Ports (inlet)**	G ⅜ - Male		

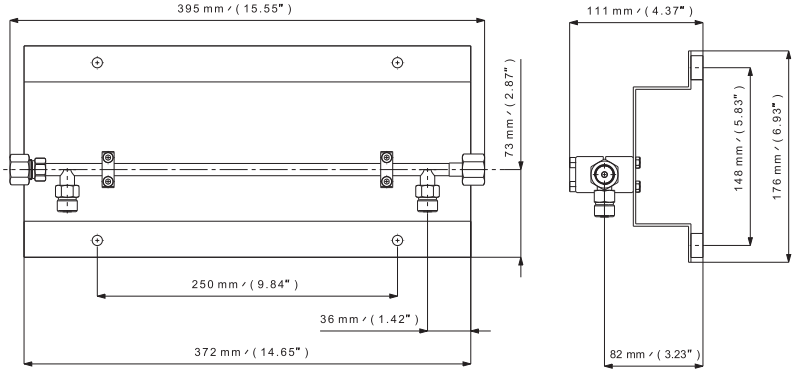

Extension for 2 cylinders

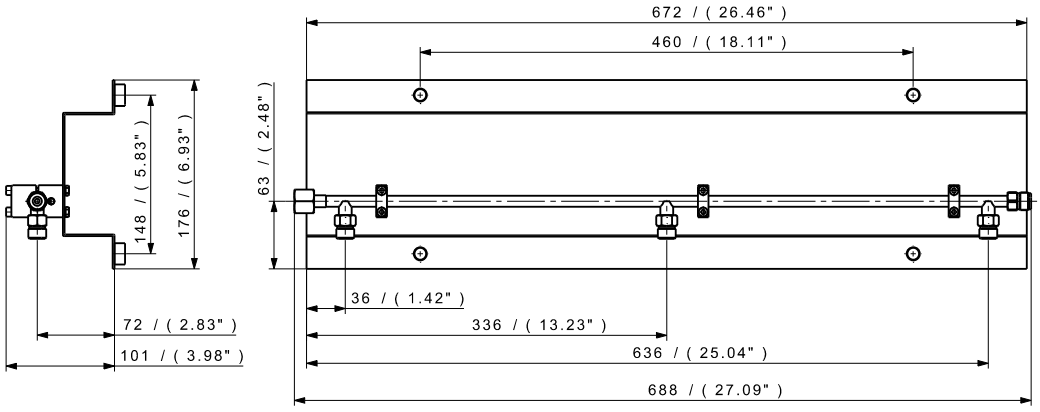

Extension for 3 cylinders

PRODUCT CONFIGURATOR

	Product		Number of cylinder		Extension Side		O-ring Material	End Connections		Plate	
EXTENSION	TD 200		3C		L		EPDM	G		P	
	MOD - supply board	MOD	Extension for 2 cylinders	2C	Left extension	L	EPDM - standard	In: G ⅜ - Male Out: G ⅜ - Female	G	With plate	P
	CEN - Switchover board	CEN	Extension for 3 cylinders	3C	Right extension	R	FPM				
	CM 200 - supply board	CM 200									
	TD 200 - Switchover board	TD 200									
	CM 500 - supply board	CM 500									
	TD 500 - Switchover board	TD 500									

ALL RIGHTS OF CHANGE RESERVED

PIGTAILS

Straight or elbow pigtail ideally suited to connect CM series supply boards or TD series switchover boards to gas cylinders

PIGTAILS

★ high pressure
★ straight or elbow
★ stainless steel, electro polished

Special requirements on request

KEY FEATURES

- Cylinder connector according the following standard:
- AFNOR, DIN, NEN, UNI...
- Other connections: on demand
- Outlet connections: G ⅜ - Female
- Material: stainless steel, electro polished

OPTIONS

- Different outlet connection
- Shut off valve

STRAIGHT VERSION

ELBOW VERSION

PRODUCT CONFIGURATOR

	STANDARD		GAS	VERSION	
PIGTAIL	AFNOR		02	S	
	French standard	AFNOR	Please indicate gas type	Straight version	S
	German standard	DIN		Elbow version	E
	British standard	BS			
	American standard	CGA			
	Italian standard	UNI			
	Dutch standard	NEN			
	G ⅜ - Female inlet connection	G			

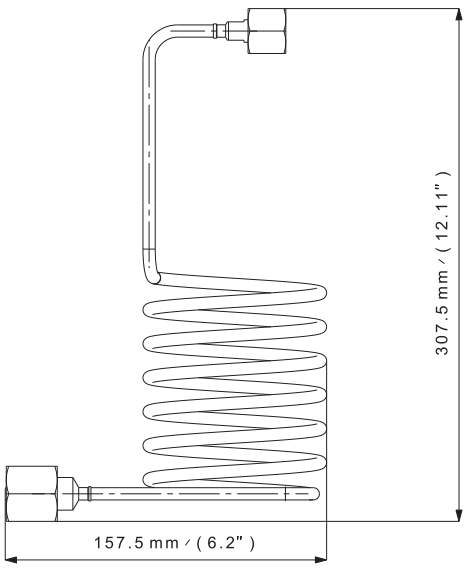

ALL RIGHTS OF CHANGE RESERVED

FX 01 / FX 02 / FX 06 | FLEXIBLE HOSES

Flexible hoses for various pressures used for connecting supply boards, Switchover boards and other equipment at the source of gas supply

FLEXIBLE HOSES

★ high pressure
★ PTFE + stainless steel (FX 01)
★ stainless steel (FX 02 / FX 06)

Special requirements on request

KEY FEATURES

- Stainless steel hoses (FX 02 + FX 06)
- Stainless steel + PTFE hose (FX 01)
- Compatible with neutral and corrosive gases according to the hose type.
- The hose is composed of a stainless steel double braid, a stainless steel or PTFE inside, and end connections.
- The hose is standardly equipped with a stainless steel safety cable as a safety best practice.

OPTIONS

- Without safety cable version
- Elbow version

MAX. OPERATING PRESSURE

Tube int. diam.	PTFE stainless steel		Stainless steel	
DN 6	300 bar	4531 psig	360 bar	5221 psig
DN 10	200 bar	2900 psig	240 bar	3480 psig
DN 16	125 bar	1812 psig	85 bar	1232 psig
DN 20	100 bar	1450 psig	80 bar	1160 psig
DN 25	80 bar	1160 psig	70 bar	1015 psig

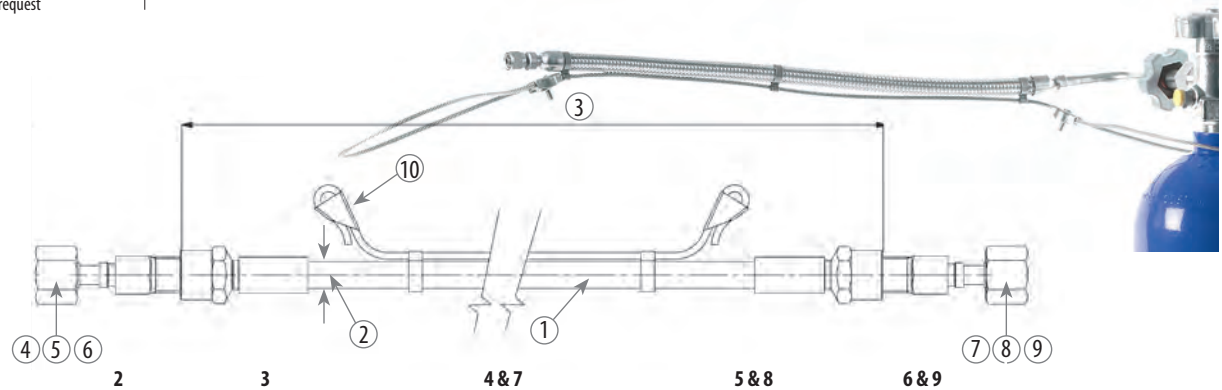

1 2 3 4 & 7 5 & 8 6 & 9

Type		Inner Diameter		Length		Type of connection		Size of connection or cylinder connection		Thread		Options	
FX01		DN6		0350		RB		6		N		C	
PTFE/stainless steel 304	FX01	6 mm	DN6	350 mm	0350	tube fitting	RB	6 mm	6	NPT	N	Safety cable (recommended)	C
Stainless steel 316L / 304	FX02	10 mm	DN10	500 mm	0500	female pipe adapter	UF	8 mm	8	BSPP-RP	G	Elbow on cylinder side**	B
		16 mm	DN16	1000 mm	1000	male pipe adapter	UM	10 mm	10	BSPT	T	Elbow on rotating nut side**	S
		20 mm	DN20	1500 mm	1500	butt weld	BW	12 mm	12	16 x 1,336	16	Elbow on both sides**	SB
		25 mm	DN25	2000 mm	2000	tube adapter	ADB	16 mm	16	G ⅜ - Female w/ rotating nut	G6	No safety cable, no elbow	A
Stainless steel*316L / 304	FX06	¼"*	DN¼	2500 mm	2500	female face seal fitting	RVF	20 mm	20				
		⅜"*	DN⅜	3000 mm	3000	male face seal fitting	RVM	25 mm	25				
				12 inches	12"	French Standard cylinder connection	NF	¼ inch	¼"				
				24 inches	24"	German cylinder connection	DIN	⅜ inch	⅜"				
				36 inches	36"	British Standard cylinder connection	BS	½ inch	½"				
				48 inches	48"	American Standard cylinder connection	CGA	¾ inch	¾"				
				60 inches	60"	Italian Standard cylinder connection	UNI	1 inch	1"				
						300 bar cylinder connection	FTSC	cylinder connection					

*FX06 Hoses uniquely available with DN¼ and DN⅜ and vice versa
**with safety cable
NB.: If a cylinder connection is required, please specify the connection and gas type.

EXAMPLE

REF.: FX01 \ DN06 \ 1000 \ ADB6 \ UM¼ \ T \ C

is a hose with the following characteristics:
- PTFE tube, SS304L braid
- Length without adapters: 1000 mm
- Connections: 6 mm adapter for tube fitting on one side and ¼" male BSPT on the other side
- Safety cable

EXAMPLE

REF.: FX02 \ DN06 \ 1000 \ BS / 3 \ G6 \ B

is a hose with the following characteristics:
- SS316L tube, SS304L braid
- Length without adapters: 1000 mm
- Connections: elbow on the side of cylinder for a BS341-3 No. 3 Cylinder and on the other side G⅜ - Female w/ rotating nut
- Safety cable

ALL RIGHTS OF CHANGE RESERVED

DUOBLOC | 3 INLETS/2 OUTLETS MONOBLOCK VALVES

Monoblock valves with 3 common inlets and 2 manual and multi-turn shut off valves for various pure gases

MONOBLOCK VALVES

★ 200 bar or 300 bar
★ Multi-turn
★ 3 inlets/2 outlets

Special requirements on request

KEY FEATURES

- Purity up to 6.0
- Multi-turn version
- Raw brass, chrome plated brass or stainless steel
- 3 common inlets
- 2 manual shut off valves with non-rotating seat disc holder (brass version), with diaphragm (stainless steel version)
- 1 high pressure gauge
- Standard inlet/outlet: G ⅜ - Female
- Rear thread for panel mounting
- Stainless steel version only available in 200 bar

OPTIONS

- Various inlet/outlet connections including ⅜ NPT - Male, ¼ NPT - Female
- NBR or FPM O-ring
- Many inlet/outlet fittings available

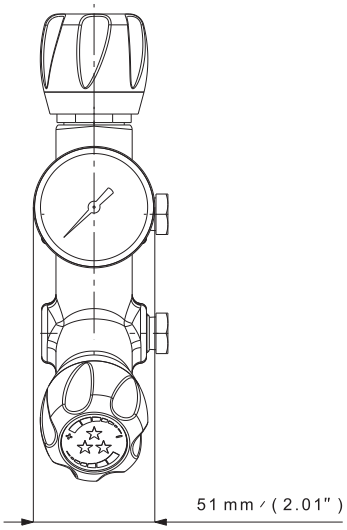

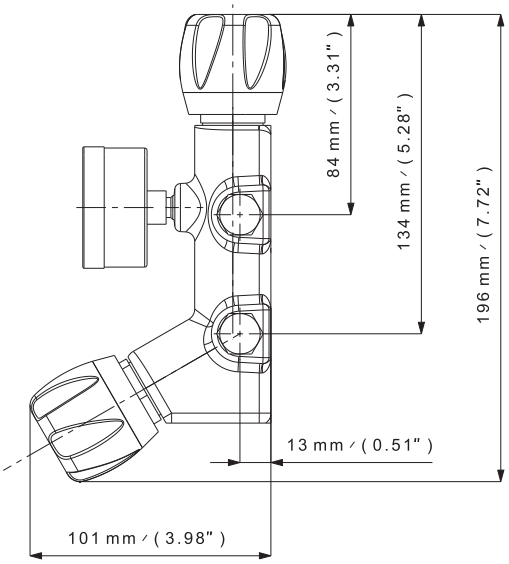

ALL RIGHTS OF CHANGE RESERVED

SPECIFICATIONS

Female ports	G ⅜, ¼ NPT or ⅜ NPT (inlet/outlet)	**Weight**	± 1,3 kg ± 2.87 lbs	**Inlet pressure**	200 bar / 300 bar 2900 psig / 4350 psig
Seat seal	PA 6.6 (brass version) PCTFE (SS version)	**Leak rate**	3.10^{-7} mbar ℓ/s He	**Flow coefficient**	Cv 0.208, Kv 0,18 (main in) Cv 0.220, Kv 0,19 (lateral)
O-ring	EPDM - standard FPM	**Temperature range**	-20°C to + 50°C -4°F to + 122°F	**Multi-turn hand-wheel**	OK
Bottom tapered	OK			**Oxygen use**	OK (special O_2 version)

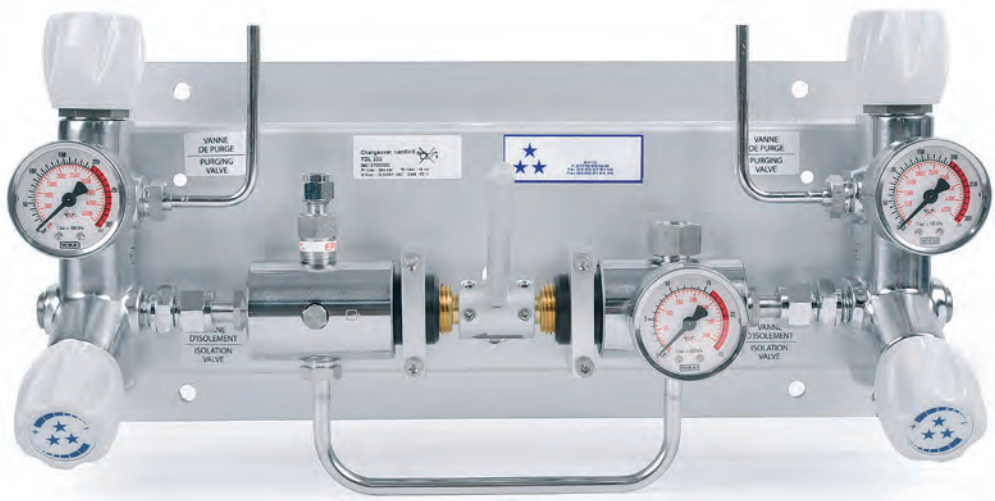

Left inlets

Right inlets

PRODUCT CONFIGURATOR

	Inlet Pressure		Body Material		End Connections		Port Orientation		O-ring Material	Version	
DUOBLOC	200		L		G		LF		EPDM	STD	
	200 bar 2900 psig	**200**	Raw Brass	**LB**	G ⅜ - Female	**G**	Left inlets	**LF**	EPDM - standard	Standard	**STD**
	300 bar (brass only) 4350 psig	**300**	Chrome Plated Brass	**L**	¼ NPT - Female (L&I version)	**N**	Right Inlets	**R**	FPM	Oxygen use	**O_2**
			Stainless steel	**I**	⅜ NPT - Female (L&I version)	**N3**					

ALL RIGHTS OF CHANGE RESERVED

SERIES VD | DIAPHRAGM LINE VALVE

- Low to high-pressure line valves for various pure gase
- High leak tightness through diaphragm sealing
- a consistent design for all versions

SHUT-OFF VALVE

★ From 50 to 300 bar inlet pressure
★ Diaphragm seal
★ ¼ turn handwheel
★ O_2 compatible (only with Brass version)

KEY FEATURES

- For gas purity up to 6.0
- Hastelloy® diaphragm for tightness and gas compatibility
- ¼ turn ergonomic handwheel
- Chrome-plated brass or stainless steel
- 3 versions : 50, 200 and 300bar inlet working pressure
- 3 orientations : female-female, male-female, female-male
- Available with 1/4NPT or G3/8 connections
- With rear threads for panel mounting

¼ NPT FF & G⅜" FF

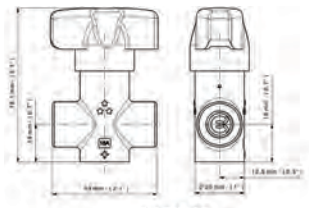

¼ NPT MF

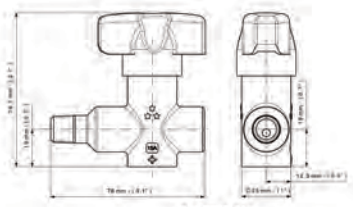

¼ NPT FM

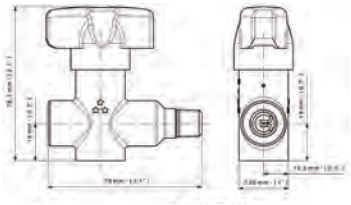

REAR MOUNTING

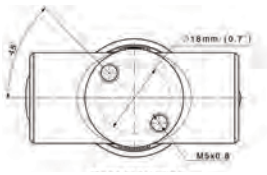

SPECIFICATIONS

Ports	¼ NPT : FF, MF or FM G⅜	**Weight**	310g	**Inlet pressure**	50 / 200 / 300 bar
Seat seal	PCTFE	**Leak rate**	10^{-8} mbar l/s He	**Flow coefficient (Kv)**	0,17 Kv / 0,2 Cv
Diaphragm	Hastelloy ®	**Temperature range**	-20° to +60 °C	**Oxygen use**	Ok up to 310 bar (brass version only)
Bottom tapered	OK 2x M5 at Ø18mm	**Seat orifice size**	Ø 4mm		

PRODUCT CONFIGURATOR

		Body Material		Inlet Pressure		Orientation		Connection		Handwheel	
V	D	B		50		FF		N		¼T	
		Chrome plated brass	B	50 bar	50	Female-Female	FF	¼NPT	N	¼ turn	¼T
		Stainless steel	S	200 bar	200	Male - Female (only with ¼NPT)	MF	G⅜	G		
				310 bar	310	Female - Male (only with ¼NPT)	FM				

ROTAREX VALVES - FITTINGS - REGULATORS

ALL RIGHTS OF CHANGE RESERVED

GAS CYLINDER HOLDER

Designed for the storage of one or large number of gas cylinders in an appropriate area

- ★ Can be fixed permanently to the wall
- ★ Securely holds cylinder in place
- ★ Allows permanent designation of appropriate cylinder storage area
- ★ Delivered with a fixing belt
- ★ Many cylinder holders can be used together, side by side
- ★ Part number: 202500000007

Special requirements on request

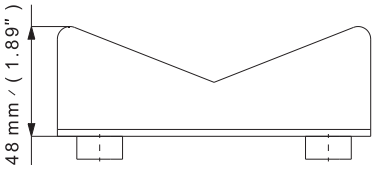

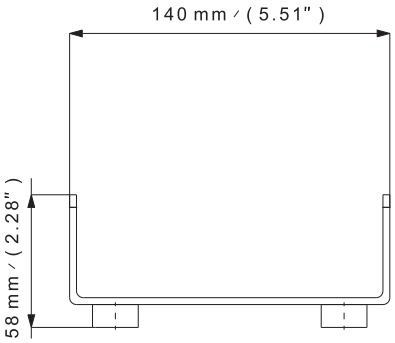

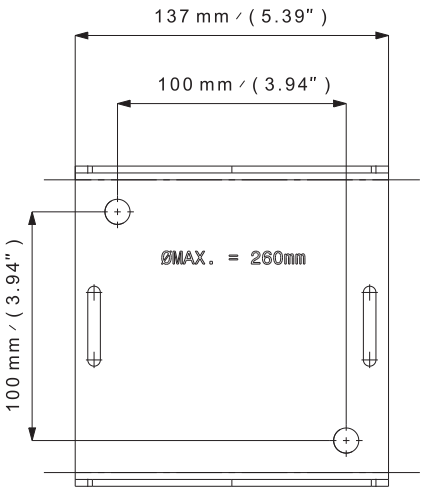

Rear view

ALL RIGHTS OF CHANGE RESERVED

GAS COMPATIBILITY

KEY TO GAS COMPATIBILITY:

Locate your gas type in the below chart and see the gas compatibility of each standard material type. Only select materials that are compatible with your gas type.

GAS COMPATIBILITY WITH MATERIALS (AT 20°C ROOM TEMPERATURE)

TITRE

GAS		B or SS 316L	PA 6.6	PTFE	PCTFE	NBR	FPM (VITON®)	EPDM
Acetylene Special requirements on request	C_2H_2	B		OK	OK			OK
Argon	Ar	B	OK	OK	OK	OK	OK	OK
Butane	C_4H_{10}	B	OK	OK	OK	OK	OK	
Carbon dioxide	CO_2	B	OK	OK	OK			OK
Carbon monoxide	CO	B	OK	OK	OK	OK		OK
Ethane	C_2H_6	B	OK	OK	OK	OK	OK	
Helium	He	B	OK		OK	OK	OK	OK
Hydrogen	H_2	B	OK		OK	OK	OK	OK
Krypton	Kr	B	OK	OK	OK	OK	OK	
Methane	CH_4	B	OK	OK	OK	OK	OK	
Nitric Oxide	NO	SS 316L		Please consult - depends on proportion of NO in the mixture				
Nitrogen	N_2	B	OK	OK	OK	OK	OK	OK
Nitrous Oxide	N_2O	SS 316L		Please consult - depends on proportion of N_2O in the mixture				
Oxygen	O_2	B					OK	OK
Propane	C_3H_8	B	OK	OK	OK	OK		
Silane	SiH_4	SS 316L		OK	OK		OK	
Ammonia	NH_3	SS 316L	OK	OK	OK			OK
Ethylene	C_2H_4	B	OK	OK	OK			
Hydrogen Sulfide	H_2S	SS 316L	OK	OK	OK		OK	OK
Sulphur Dioxide	SO_2	SS 316L		OK	OK			OK
Sulphur Hexafluoride	SF_6	B	OK	OK	OK	OK	OK	OK

VITON® is a registered trademark of the DUPONT NEMOUR Company
Hastelloy® is a registered trademark of HAYNES INTERNATIONAL Inc.

ALL RIGHTS OF CHANGE RESERVED

CONVERSION CHARTS

FLOW CONVERSION

	m^3/h	l/h	$foot^3/min$	l/s	cm^3/s
m^3/h	1	1×10^3	0.589	0,2778	277,78
l/h	1×10^{-3}	1	5.885×10^{-4}	$2,778 \times 10^{-4}$	0,2778
$foot^3/min$	1,69	$1,699 \times 10^3$	1	0,4719	471,95
l/s	3,6	$3,6 \times 10^3$	2.119	1	10^3
cm^3/s	$3,6 \times 10^{-3}$	3,6	2.119×10^{-3}	10^{-3}	1

PRESSURE CONVERSION

	bar	mbar	kPa	MPa	atm	psig
bar	1	10^3	100	0,1	0,987	14.5
mbar	10^{-3}	1	0,1	10^{-4}	$9,869 \times 10^{-4}$	14.5×10^{-3}
kPa	10^{-2}	10	1	10^{-3}	$9,869 \times 10^{-3}$	0.145
MPa	10	10^4	10^3	1	9,869	145
atm	1,013	1013	101,3	$1,013 \times 10^{-1}$	1	14.69
psig	$6,89 \times 10^{-2}$	68,9	6,89	$6,89 \times 10^{-3}$	$6,8 \times 10^{-2}$	1

LEAK RATE

	Atm.cc /sec	mbar.l /sec	$Atm.mm^3$ /sec	Atm.cc /min	Atm.L /min	$Atm.m^3$ /min	Atm.cu.ft /yr	torr.l /sec
Atm.cc/sec	1	1.013	1000	60	0.06	6.00E-05	1116	0.759
mbar.l/sec	0.987	1	987	59.23	0.059	5.90E-05	1101	0.75
$Atm.mm^3/sec$	0.001	0.001	1	0.06	6.00E-05	6.00E-08	1.116	0.0007
Atm.cc/min	0.0167	0.017	16.67	1	0.001	1.00E-06	18.6	0.012
Litre/min	16.67	16.88	16667	1000	1	0.001	18601	12.67
$Atm.m^3/min$	16667	16883	16666667	1000000	1000	1	18601190	12664
cu ft/yr	0.0009	0.0009	0.896	0.054	5.37E-05	5.37E-08	1	0.0007
torr.l/sec	1.316	1.33	1316	78.96	0.0789	7.89E-05	1468	1

TEMPERATURE

C°	F°	K°	R°
-20	-4	253	456
-10	14	263	474
0	32	273	492
10	50	283	510
20	68	293	528
30	86	303	546
40	104	313	564
50	122	323	582
60	140	333	600
70	158	343	618
80	176	353	636
90	194	363	654
100	212	373	672
200	392	473	852
300	572	573	1032
400	752	673	1212
500	932	773	1392
600	1112	873	1572
700	1292	973	1752
800	1472	1073	1932
900	1652	1173	2112
1000	1832	1273	2292

DIMENSION

metric	inches
3	0.135
6	0.270
8	0.360
10	0.450
12	0.540
14	0.630
16	0.720
18	0.810
20	0.900
22	0.990
25	1.125

inch fractional	inch decimal	metric (mm)
1/16"	0.063	1,59
1/8"	0.125	3,18
3/16"	0.188	4,76
1/4"	0.250	6,35
5/16"	0.313	7,94
3/8"	0.375	9,53
1/2"	0.500	12,70
7/16"	0.438	11,11
5/8"	0.625	15,88
3/4"	0.750	19,05
7/8"	0.875	22,23
1"	1.000	25,40

ALL RIGHTS OF CHANGE RESERVED

NOTES

ALL RIGHTS OF CHANGE RESERVED

NOTES

ALL RIGHTS OF CHANGE RESERVED

A FULL LINE OF GAS CONTROL SOLUTIONS

COMPLETE SOLUTIONS FROM SOURCE TO PROCESS.

ROTAREX is helping engineers worldwide to get better gas results: from ultra high purity production and medical care facilities to industrial and LPG applications, as well as alternative energy vehicles, fire suppression, diving, aerospace, cryogenics, laboratory, petro-chemical and welding. ROTAREX applies over 90 years of know-how and experience to custom design, develop and manufacture the high performance valves, regulators and fittings to suit your needs, all in one hand. Discover the difference ROTAREX can make in your world.

CYLINDER VALVES | **EQUIPMENT** | **FIRETEC** | **AUTOMOTIVE** | **LPG/SRG** | **MEDITEC**

ROTAREX
VALVES - FITTINGS - REGULATORS

ULTRA HIGH PURITY VALVES

MEDICAL VALVES & EQUIPMENT

INDUSTRIAL CYLINDER VALVES

REFRIGERANT CYLINDER VALVES

PRESSURE REGULATORS

SUPPLY & SWITCH OVER BOARDS

LINE VALVES

FITTINGS & ADAPTORS

FIXED INSTALLATION FIRE SYSTEMS

OBJECT FIRE SUPPRESSION SYSTEMS

AUTOMOTIVE VALVES & REGULATORS

WATER CARBONATION

LPG TANK VALVES & REGULATORS

LPG CYLINDER VALVES & REGULATORS

DIGITAL MEASUREMENT SYSTEMS

PLASTIC INJECTION MOULDING

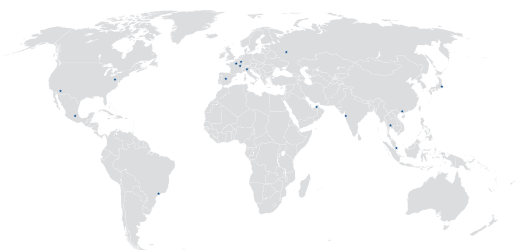

BRASIL / CHINA / FRANCE / INDIA / ITALY / JAPAN / LUXEMBOURG / MEXICO / MIDDLE EAST / RUSSIA / SINGAPORE / SPAIN / THAILAND / USA

ROTAREX
VALVES - FITTINGS - REGULATORS

www.rotarex.com

WORLDWIDE HEADQUARTERS

ROTAREX S.A.
24, rue de Diekirch,
L-7440 Lintgen
Luxembourg
Tel.: +352 32 78 32-1
Fax: +352 32 78 32-854
E-mail: info@rotarex.com

REGIONAL / COUNTRY HEADQUARTERS

NORTH AMERICA

USA
Rotarex North America
Hackettstown
E-mail: northamerica@rotarex.com

SOUTH AMERICA

BRASIL
Rotarex Brazil Ltda
São Paulo
E-mail: brasil@rotarex.com

CENTRAL AMERICA

MEXICO
Rotarex México
Mexico City
E-mail: mexico@rotarex.com

EUROPE

EUROPEAN HEADQUARTERS
Rotarex S.A. Luxembourg
24, rue de Diekirch,
L-7440 Lintgen, Luxembourg
Tel.: +352 32 78 32-1
E-mail: salesequipment@rotarex.com

UNITED KINGDOM
Rotarex (UK) Ltd.
Norwich
E-mail: uk@rotarex.com

ITALY
Rotarex Italia S.r.l.
Ciliverghe di Mazzano
E-mail: italia@rotarex.com

SPAIN
Rotarex Spain
Madrid
E-mail: spain@rotarex.com

RUSSIA
Rotarex Rus
Moscow
E-mail: russia@rotarex.com

POLAND
Rotarex Polska
Brzeg
E-mail: polska@rotarex.com

ASIA - PACIFIC

SINGAPORE
Rotarex Fareast Pte Ltd
Singapore
E-mail: fareast@rotarex.com

CHINA
Rotarex Star
Shanghai
E-mail: china@rotarex.com

JAPAN
Rotarex Japan Ltd
Tokyo
E-mail: japan@rotarex.com

INDIA
Rotarex ENGG. PVT. LTD.
Mumbai
E-mail: india@rotarex.com

THAILAND
Rotarex (Thailand) Co Ltd.
Pakkret
E-mail: thailand@rotarex.com

TAIWAN
Rotarex Taïwan
New Taipei City
E-mail: taiwan@rotarex.com

MIDDLE EAST / AFRICA

MIDDLE EAST
Rotarex Middle East
Dubai
E-mail: middle-east@rotarex.com

Handelsonderneming PD
GASAPPENDAGES - GASMENGERS
Bijsterhuizen 21-52
Tel: +31(0)24-3565688
6604 LG Wijchen
Website: www.pdhandel.nl

© 2018 - ROTAREX S.A.
ROTAREX Equipment™ ROTAREX S.A.
E02000_CAT_EN_A4_V12_EUR